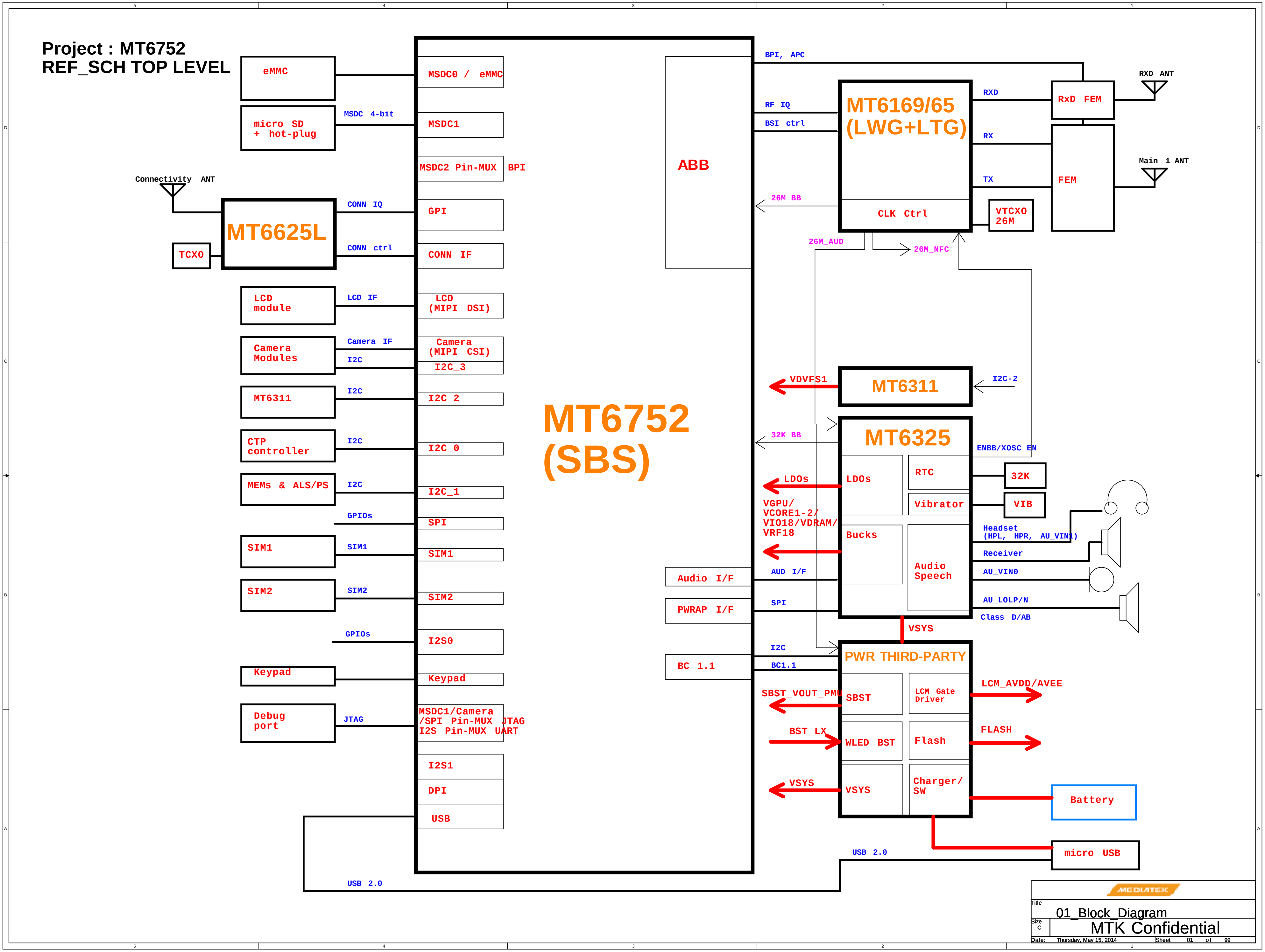

Project : MT6752
REF_SCH TOP LEVEL
eMMC
micro SD + hot-plug
MSDC 4-bit
Connectivity ANT
MT6625L
TCXO
CONN IQ
CONN ctrl
LCD module
LCD IF
Camera Modules
Camera IF
I2C
MT6311
I2C
CTP controller
I2C
MEMs & ALS/PS
I2C
GPIOs
SIM1
SIM1
SIM2
SIM2
GPIOs
Keypad
Debug port
JTAG
USB 2.0
MSDC0 / eMMC
MSDC1
MSDC2 Pin-MUX BPI
GPI
CONN IF
LCD (MIPI DSI)
Camera (MIPI CSI)
I2C_3
I2C_2
I2C_0
I2C_1
SPI
SIM1
SIM2
I2S0
Keypad
MSDC1/Camera /SPI Pin-MUX JTAG
I2S Pin-MUX UART
I2S1
DPI
USB
MT6752 (SBS)
ABB
Audio I/F
PWRAP I/F
BC 1.1
BPI, APC
RF IQ
BSI ctrl
26M_BB
MT6169/65 (LWG+LTG)
CLK Ctrl
RXD
RX
TX
RxD FEM
FEM
VTCXO 26M
RXD ANT
Main 1 ANT
26M_AUD
26M_NFC
VDVFS1
MT6311
I2C-2
32K_BB
MT6325
ENBB/XOSC_EN
LDOs
LDOs
RTC
32K
Vibrator
VIB
VGPU/ VCORE1-2/ VIO18/VDRAM/ VRF18
Bucks
Headset (HPL, HPR, AU_VIN1)
Receiver
Audio Speech
AUD I/F
AU_VIN0
SPI
AU_LOLP/N
Class D/AB
VSYS
I2C
BC1.1
PWR THIRD-PARTY
SBST_VOUT_PMU
SBST
LCM Gate Driver
LCM_AVDD/AVEE
BST_LX
WLED BST
Flash
FLASH
VSYS
VSYS
Charger/ SW
Battery
USB 2.0
micro USB
MEDIATEK
Title
01_Block_Diagram
Size C
MTK Confidential
Date: Thursday, May 15, 2014
Sheet 01 of 99

I2C	Function	I2C Spec.	Budget Timing	I2C Slave Address (7-bit mode)
I2C-0	CTP	400 Kbps	Yes.	GT917S / CTP I2C address: 0X5D (Write:0xBA, Read:0xBB)
	VBAT Boost	3.4 Mbps		TPS61280A / Boost buck I2C address: 0X75 (Write:0xEA, Read:0xEB)
	LCM Gate Driver	400 Kbps		NT50358 / LCM Gate Driver I2C address: 0X3E (Write:0x7C, Read:0x7D)
	MT6306 IO	3.8 Mbps	TBD	MT6306 / GPIO extender I2C address: 0X64 (Write:0xC8, Read:0xC9)
	SWCHR	400 Kbps		BQ24261/ SWCHR I2C address: 0X6B (Write:0xD6, Read:0xD7)
I2C-1	M Sensor	400 Kbps		AK8963C / M-Sensor I2C Address: 0x0C (Write:0x18, Read:0x19)
	A+Gyro Sensor	400 Kbps	Yes.	MPU-6515 / A+Gyro I2C Address: 0x68 (Write:0xD0, Read:0xD1)
	Baro Sensor	400 Kbps		BMP180 / Baro I2C address: 0X77 (Write:0xEE, Read:0xEF)
	RGB / PS Sensor	400 Kbps		CM36652 / RGB+PS I2C address: 0X60 (Write:0xC0, Read:0xC1)
	NFC	1.2 Mbps	Yes.	NFC I2C address: 0X28 (Write:0x50, Read:0x51)
	MHL	TBD	TBD	CI2CA High : MHL I2C Address = 0x3B/3F/4F. (Write:0x76/7E/9E, Read:0x77/7F/9F) CI2CA Low : MHL I2C Address = 0x39/3D/4D. (Write:0x72/7A/9A, Read:0x73/7B/9B)
	Flash LED	400 Kbps		RT4505 / Flash LED I2C address: 0X63 (Write:0xC6, Read:0xC7)
	Front Camera	400 Kbps	Yes.	Front camera (OV5648) I2C address: 0X36 (Write:0x6C, Read:0x6D) AF driver (AD5820) I2C address: 0X0C (Write:0x18, Read:0x19)
I2C-2	MT6311	TBD	Yes.	MT6311 / 2-Phase Buck I2C address: 0X6B (Write:0x, Read:0x)
I2C-3	Rear Camera - 13M	400 Kbps	Yes.	Rear camera (IMX135) I2C address: 0X10 (Write:0x20, Read:0x21) AF driver (DW9714A) I2C address: 0X18 (Write:0x30, Read:0x31)

Note : I2C Spec. : Standard mode (100 kbps) and Fast mode (400 kbps), Fast mode Plus (1 Mbps) and High-speed mode (3.4 Mbps)

MEDIATEK

Title: 02_I2C_ID_Overview

Size: C — MTK Confidential

Date: Thursday, May 15, 2014 Sheet 02 of 99

V0.2 Change Notice (2014.05.14)
1. Change SH2001 to R2001.0Ohm for 8x/4x co-PCB by SMT eBOM
2. Change eBOM value from 100nF to 1uF (PDN requirement)
    DVDD_DVFS1: C10050~54/58~64,
    VGPU: C10010/11/13/15/17/31
    VCORE_AO: C10018/19/23~27/33~35/37/39
3. Front camera I2C change from I2C3 to I2C1
4. Change R1103/R1104 footprint
5. Change U5003 value to U / EPOCOS_B8313

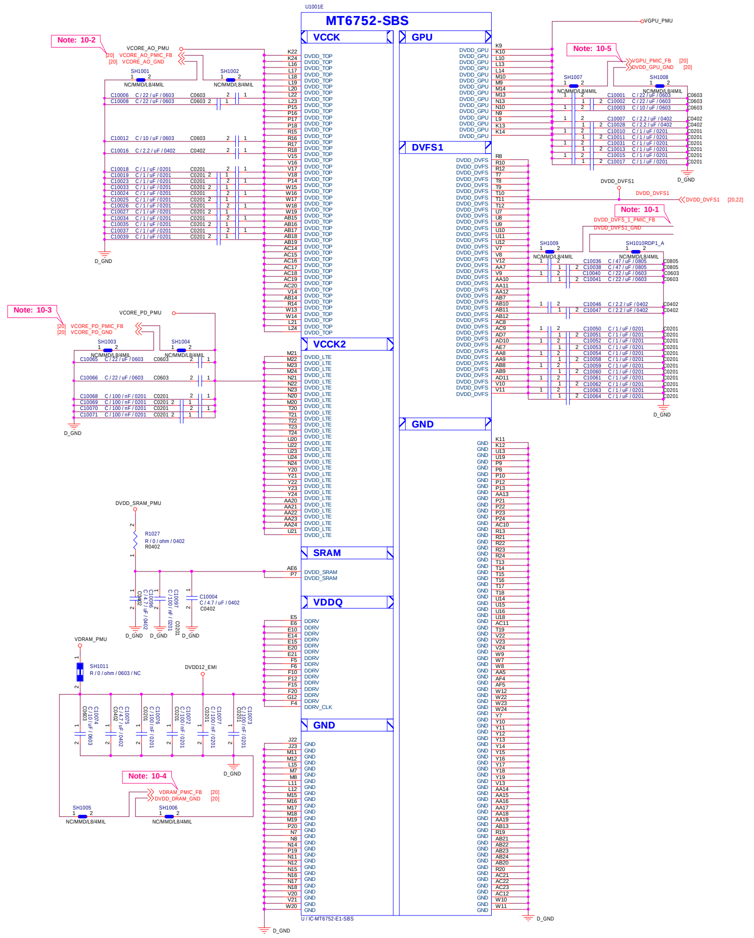

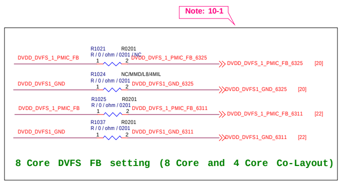

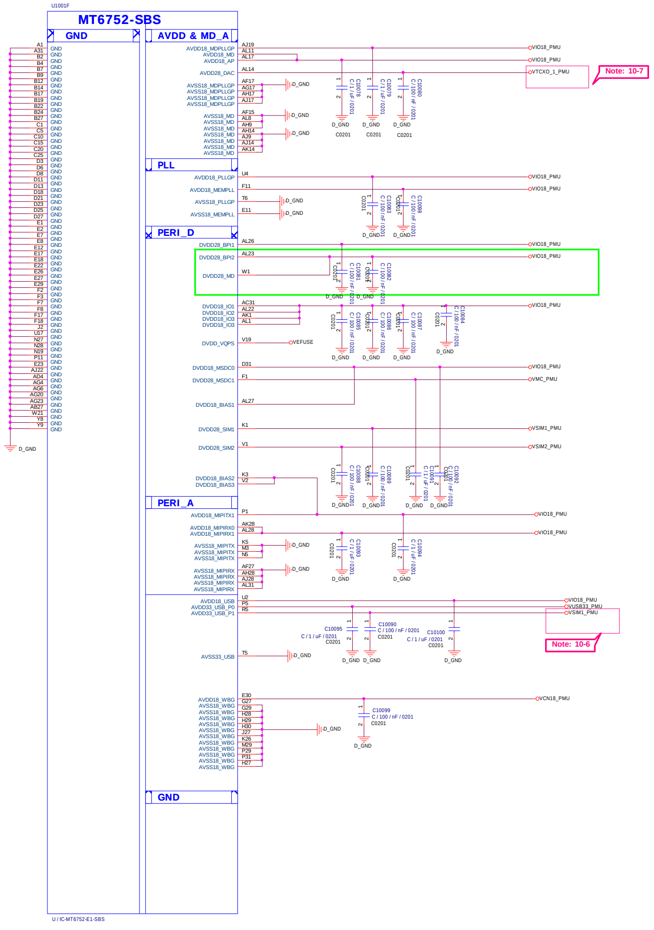

Schematic design notice of "10_BB_POWER" page.

Note 10-1: 4 mil GND trace with good shielding to PMIC (Differential)

Differential pair of DVFS1 remote sense must be close to MT6752's ball.

Note 10-2: VCORE_AO remote sense must be close to MT6752's ball.

Remote sense trace with GNDshielding to PMIC (Differential)

Note 10-3: VCORE_PD remote sense must be close to MT6752's ball.

Remote sense trace with GNDshielding to PMIC (Differential)

Note 10-4: VDRAM remote sense must be close to MT6752's ball.

Note 10-5: Differential pair of GPU remote sense must be close to MT6752's ball.

Note 10-6: Connect AVDD33_USB_P1 (R5 ball) to "VSIM1_PMU" for IC-USB / Samrt card application.

Connect AVDD33_USB_P1 (R5 ball) to "VUSB33_PMU" for USB application.

Note 10-7: AVDD28_DAC (AL14 ball) should be powered by "VTCXO_1_PMU". The de-coupling cap.has to be placed as close to BB as possible.

Title	10_BB_POWER
Size D	MTK Confidential
Date	Thursday, May 15, 2014 — Sheet 10 of 99

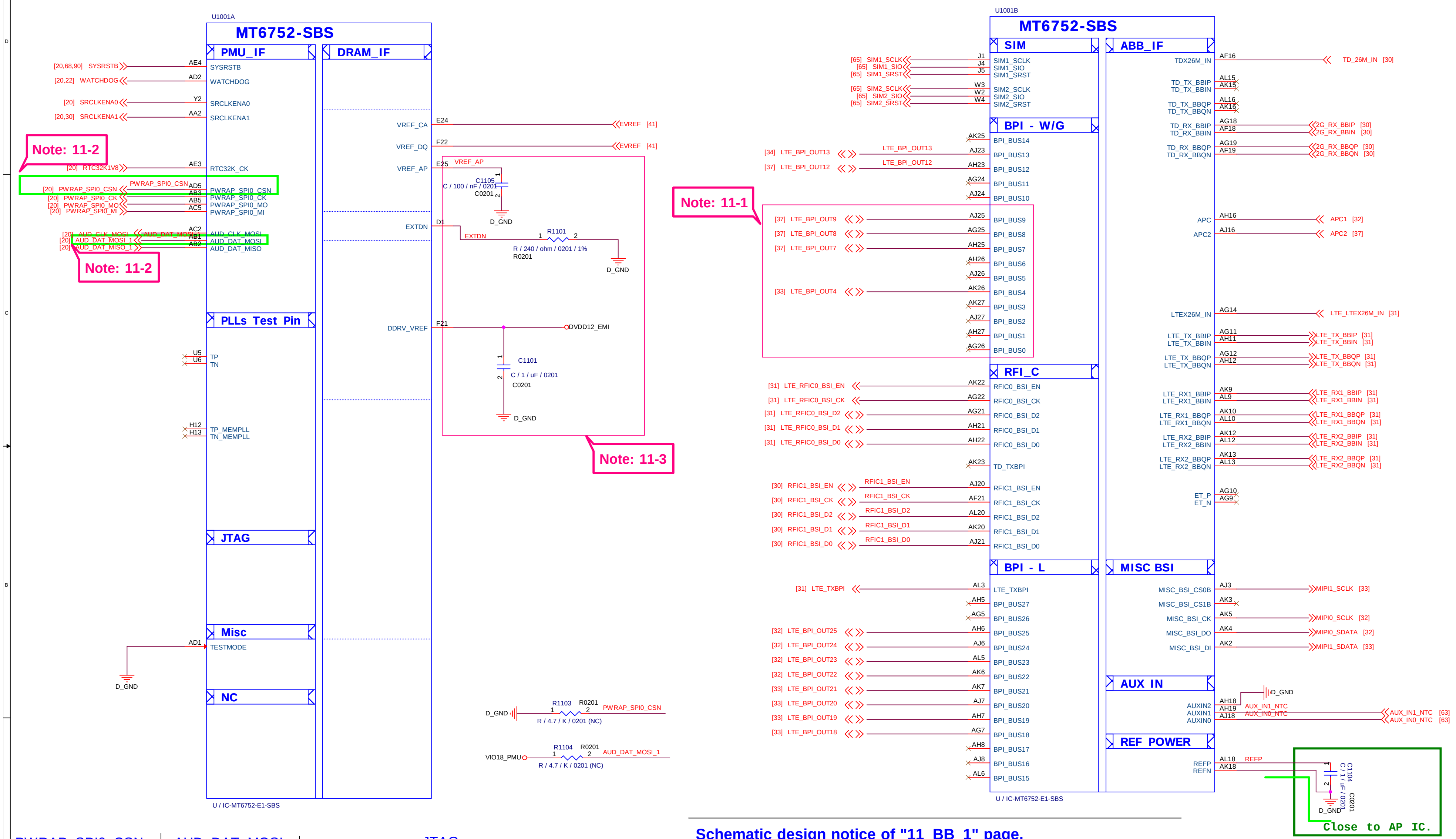

PWRAP_SPI0_CSN	AUD_DAT_MOSI	JTAG
HI	LO	N/A
HI	HI	SPI_CSB/SPI_CLK/SPI_MO/SPI_MI
LO	LO	CAM_CLK0/CAM_RST0/CAM_RST1/CAM_PDN0
LO	HI	MSDC1_CLK/MSDC1_CMD/MSDC1_DAT0/MSDC1_DAT1

Schematic design notice of "11_BB_1" page.

Note 11-1: The BPI_BUS0~BPI_BUS9 are capable of 2.8V I/O operation.

Note 11-2: PWRAP_SPI0_CSN and AUD_DAT_MOSI are JTAG feature in bootstrap.

Note 11-3: The de-coupling cap. of DRAM VREF have to be placed as close to BB as possible.

MEDIATEK

Title: 11_BB_1

Size: C

MTK Confidential

Date: Thursday, May 15, 2014 Sheet 11 of 99

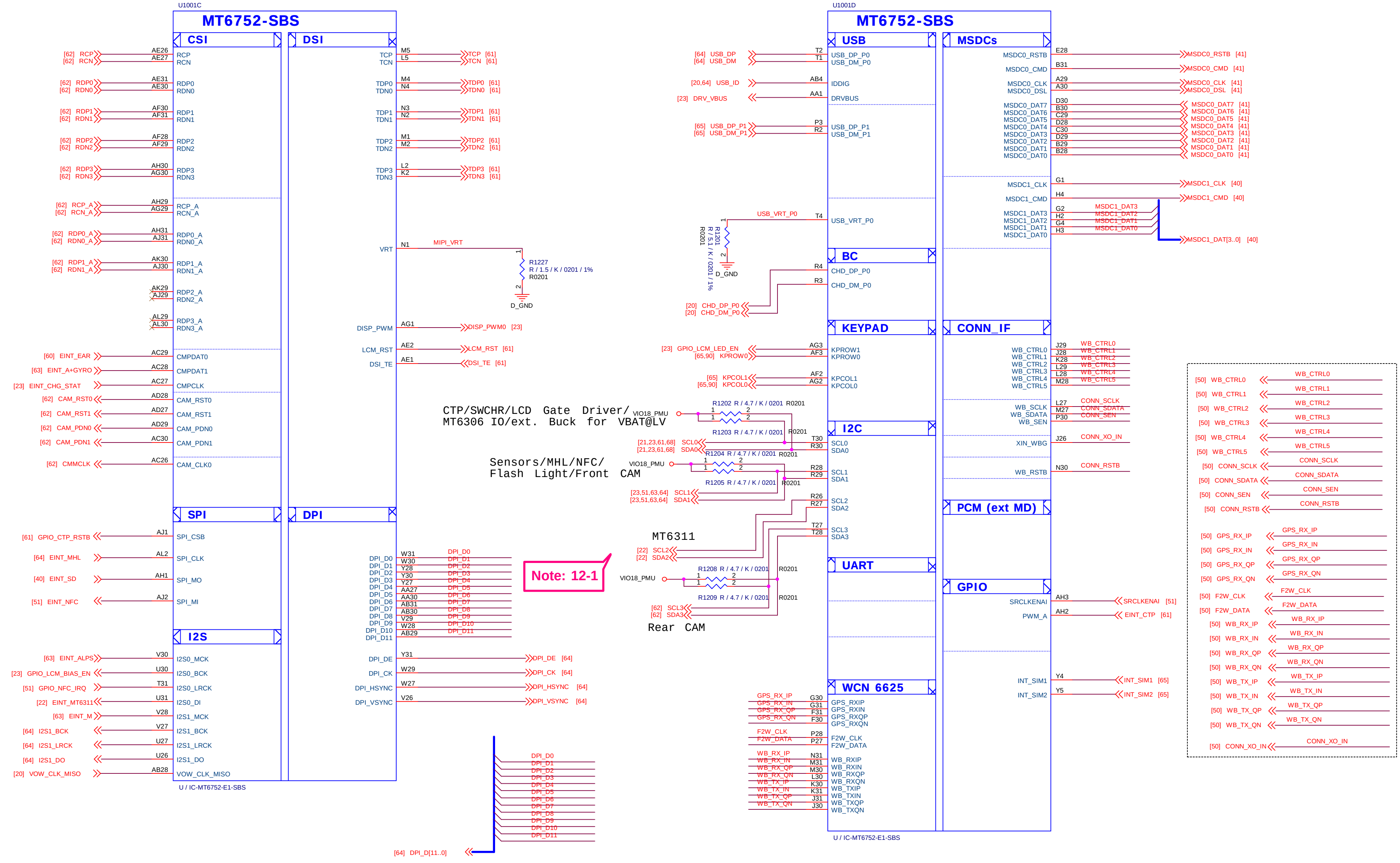

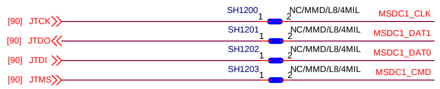

Schematic design notice of "12_BB_2" page.

Note 12-1: I2C2 is dedicated for MT6311 2-phase buck control.

MEDIATEK

Title: 12_BB_2

Size: C

MTK Confidential

Date: Thursday, May 15, 2014 Sheet 12 of 99

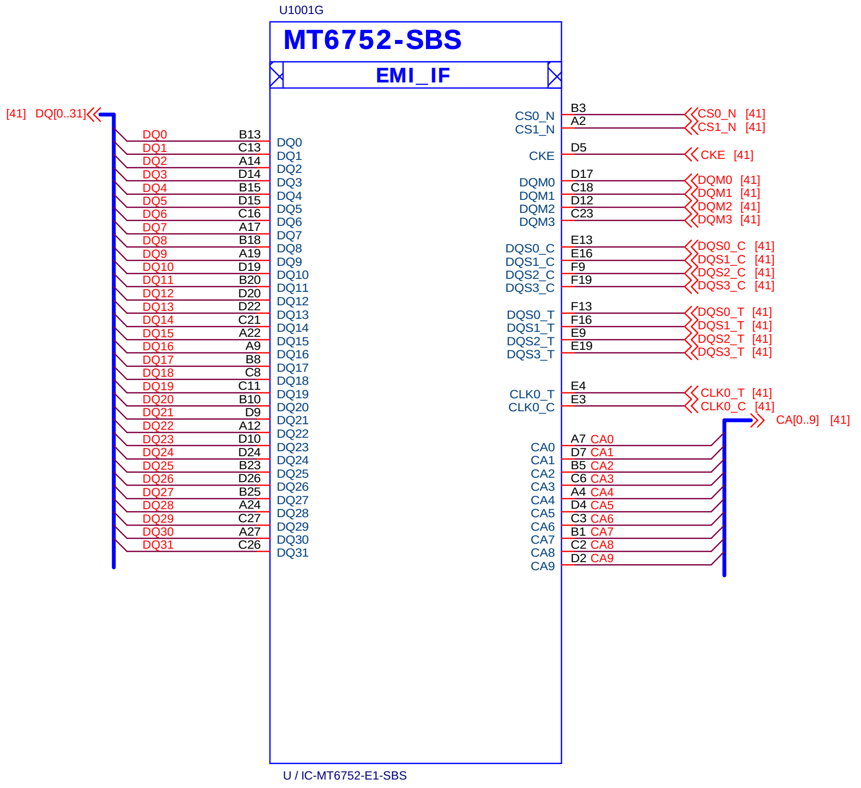

Title	13_BB_3
Size B	MTK Confidential
Date: Thursday, May 15, 2014	Sheet 13 of 99

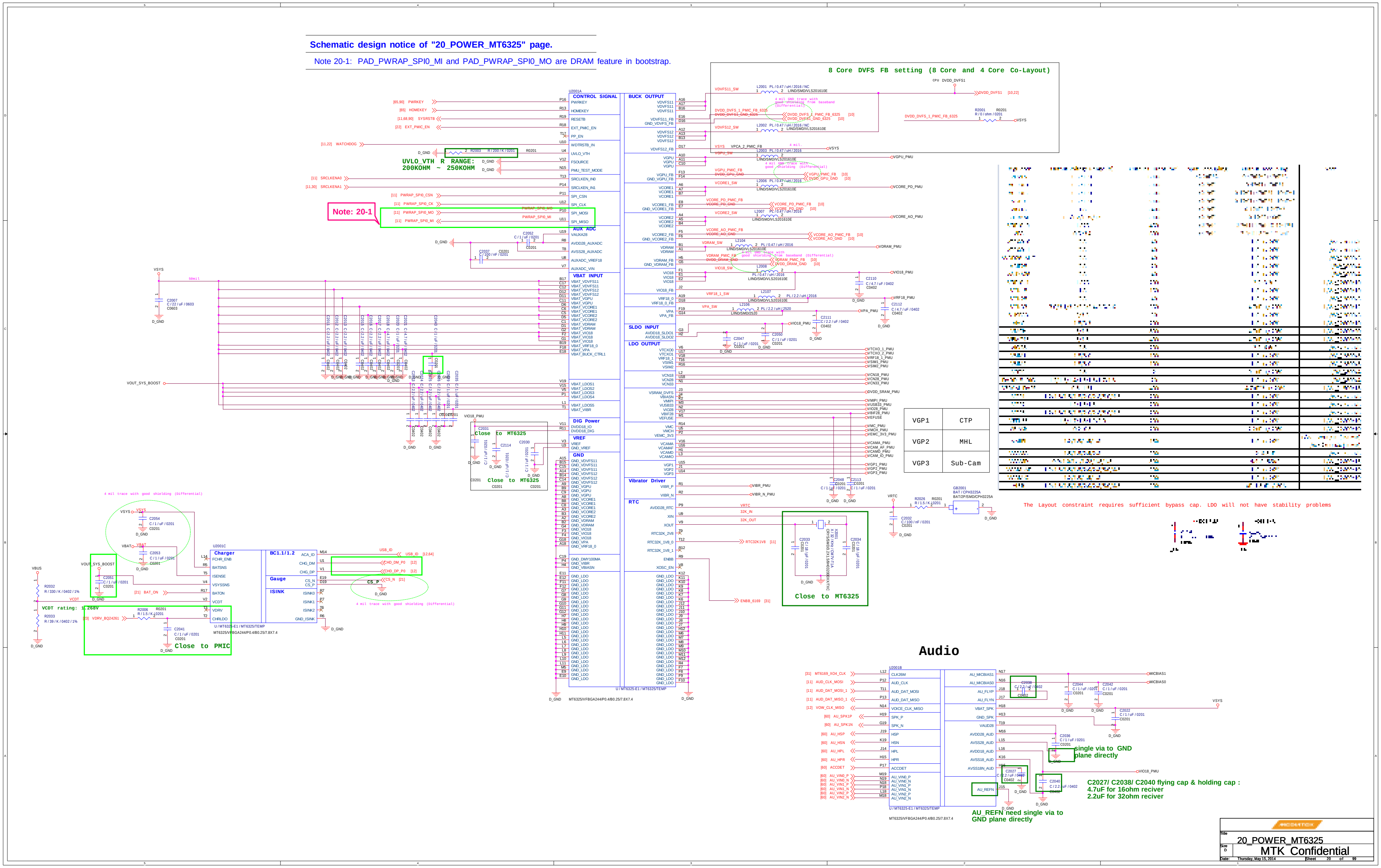

Schematic design notice of "20_POWER_MT6325" page.
Note 20-1: PAD_PWRAP_SPI0_MI and PAD_PWRAP_SPI0_MO are DRAM feature in bootstrap.
Note: 20-1
8 Core DVFS FB setting (8 Core and 4 Core Co-Layout)
UVLO_VTH R RANGE: 200KOHM ~ 250KOHM
CONTROL SIGNAL
BUCK OUTPUT
AUX ADC
VBAT INPUT
SLDO INPUT
LDO OUTPUT
DIG Power
VREF
GND
Vibrator Driver
RTC
Charger
BC1.1/1.2
Gauge
ISINK
Close to MT6325
Close to PMIC
VCDT rating: 1.268V
VGP1 CTP
VGP2 MHL
VGP3 Sub-Cam
The Layout constraint requires sufficient bypass cap. LDO will not have stability problems
Audio
single via to GND plane directly
C2027/ C2038/ C2040 flying cap & holding cap :
4.7uF for 16ohm reciver
2.2uF for 32ohm reciver
AU_REFN need single via to GND plane directly
U / MT6325-E1 / MT6325/TEMP
MT6325/VFBGA244/P0.4/B0.25/7.8X7.4
20_POWER_MT6325
MTK Confidential
Thursday, May 15, 2014
Sheet 20 of 99

System Boost for VBAT@LV

TPS61280A I2C address: 0X75 (Write:0xEA, Read:0xEB)

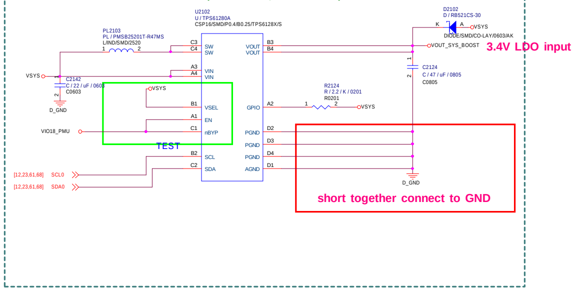

BATTERY CONNECTOR

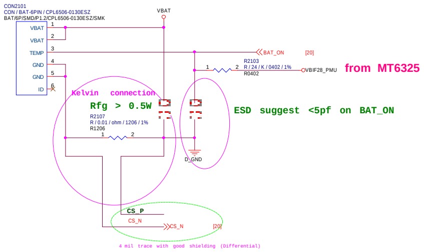

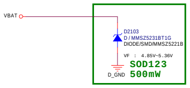

Title	21_POWER_TBD
Size D	MTK Confidential
Date: Thursday, May 15, 2014	Sheet 21 of 99

2-Phase Buck

MT6311 / 2-Phase Buck I2C address: 0X6B (Write:0x, Read:0x)

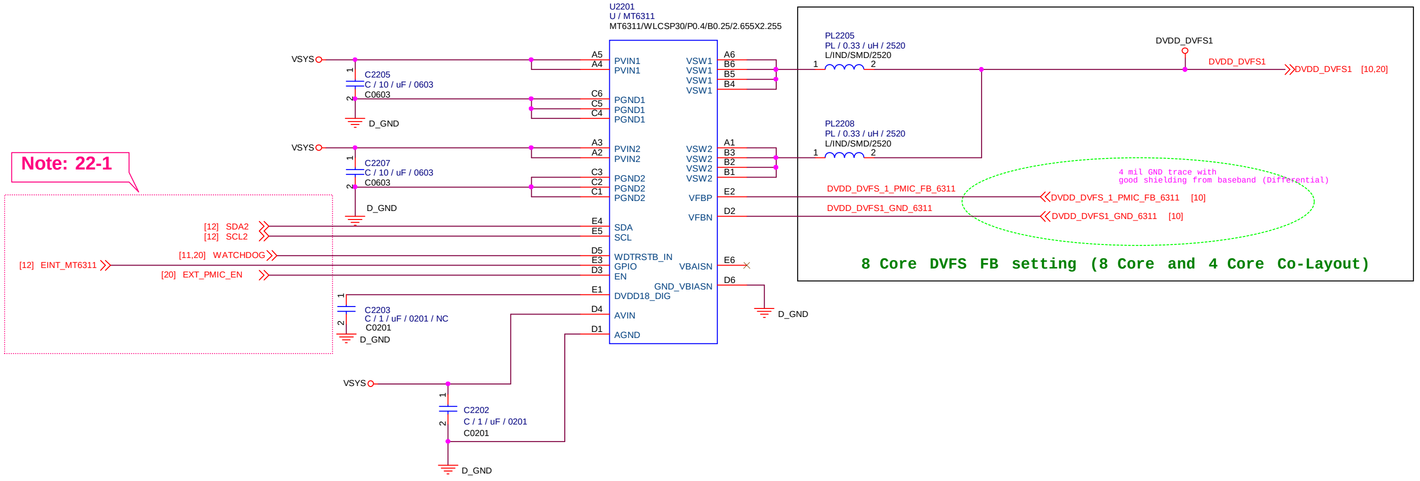

Schematic design notice of "22_POWER_MT6311" page.

Note 22-1: MT6311 => Buck EN controlled by EXT_PMIC_EN from MT6325 and I2C.

Title	22_POWER_MT6311
Size C	MTK Confidential
Date: Thursday, May 15, 2014	Sheet 22 of 99

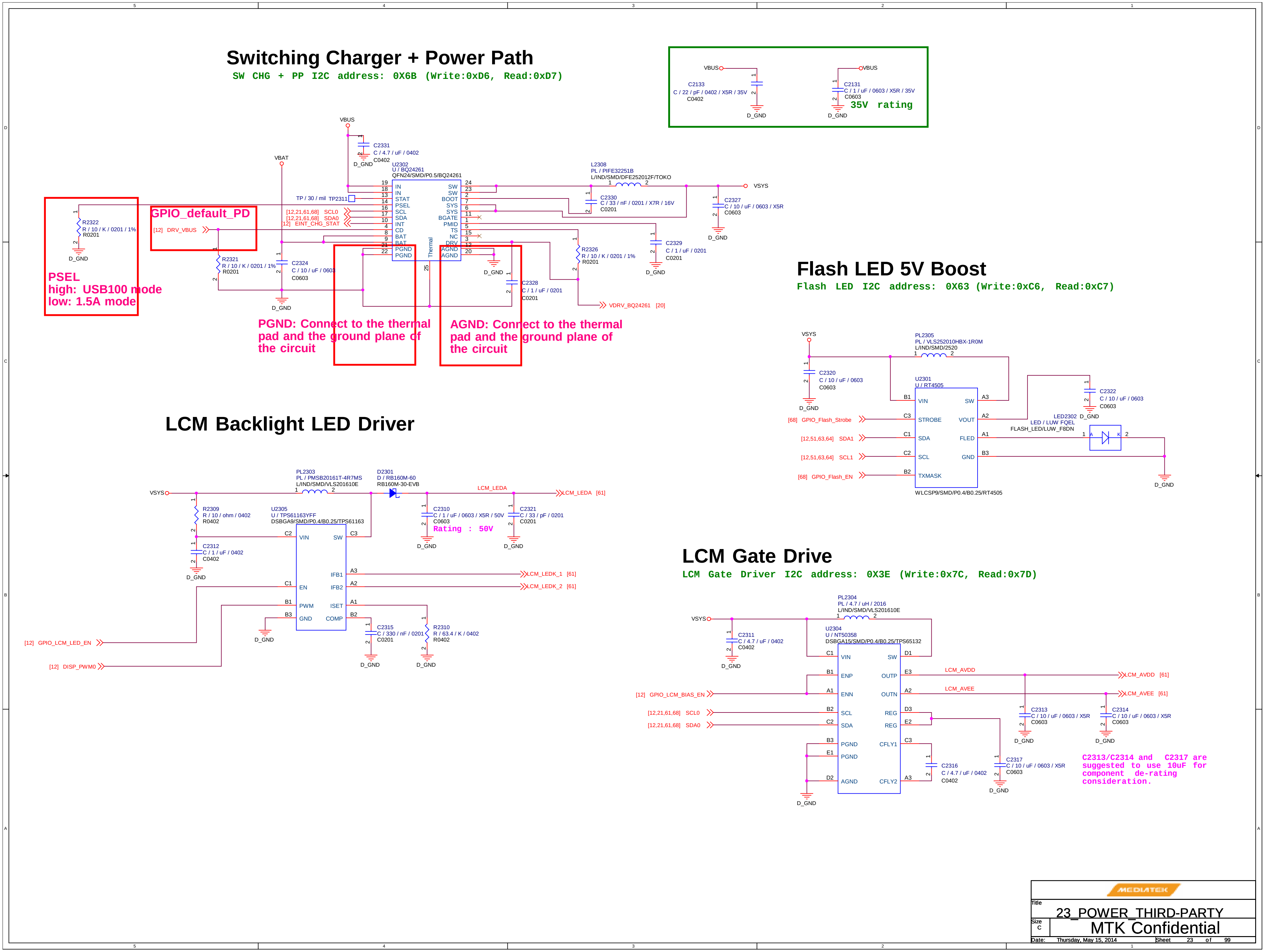
Switching Charger + Power Path
SW CHG + PP I2C address: 0X6B (Write:0xD6, Read:0xD7)
VBUS
C2133
C / 22 / pF / 0402 / X5R / 35V
C0402
D_GND
C2131
C / 1 / uF / 0603 / X5R / 35V
C0603
35V rating
C2331
C / 4.7 / uF / 0402
C0402
VBAT
U2302
U / BQ24261
QFN24/SMD/P0.5/BQ24261
IN
STAT
PSEL
SCL
SDA
INT
CD
BAT
PGND
Thermal
SW
BOOT
SYS
BGATE
PMID
TS
NC
DRV
AGND
L2308
PL / PIFE32251B
L/IND/SMD/DFE252012F/TOKO
VSYS
C2330
C / 33 / nF / 0201 / X7R / 16V
C0201
C2327
C / 10 / uF / 0603 / X5R
C0603
C2329
C / 1 / uF / 0201
C0201
R2326
R / 10 / K / 0201 / 1%
R0201
C2328
C / 1 / uF / 0201
C0201
VDRV_BQ24261 [20]
TP / 30 / mil TP2311
[12,21,61,68] SCL0
[12,21,61,68] SDA0
[12] EINT_CHG_STAT
GPIO_default_PD
[12] DRV_VBUS
R2322
R / 10 / K / 0201 / 1%
R0201
R2321
R / 10 / K / 0201 / 1%
R0201
C2324
C / 10 / uF / 0603
C0603
PSEL
high: USB100 mode
low: 1.5A mode
PGND: Connect to the thermal pad and the ground plane of the circuit
AGND: Connect to the thermal pad and the ground plane of the circuit
Flash LED 5V Boost
Flash LED I2C address: 0X63 (Write:0xC6, Read:0xC7)
PL2305
PL / VLS252010HBX-1R0M
L/IND/SMD/2520
C2320
C / 10 / uF / 0603
C0603
U2301
U / RT4505
VIN
STROBE
SDA
SCL
TXMASK
SW
VOUT
FLED
GND
WLCSP9/SMD/P0.4/B0.25/RT4505
[68] GPIO_Flash_Strobe
[12,51,63,64] SDA1
[12,51,63,64] SCL1
[68] GPIO_Flash_EN
C2322
C / 10 / uF / 0603
C0603
LED2302
LED / LUW FQEL
FLASH_LED/LUW_F8DN
LCM Backlight LED Driver
PL2303
PL / PMSB20161T-4R7MS
L/IND/SMD/VLS201610E
D2301
D / RB160M-60
RB160M-30-EVB
LCM_LEDA
LCM_LEDA [61]
R2309
R / 10 / ohm / 0402
R0402
U2305
U / TPS61163YFF
DSBGA9/SMD/P0.4/B0.25/TPS61163
C2310
C / 1 / uF / 0603 / X5R / 50V
C0603
Rating : 50V
C2321
C / 33 / pF / 0201
C0201
C2312
C / 1 / uF / 0402
C0402
EN
PWM
GND
IFB1
IFB2
ISET
COMP
LCM_LEDK_1 [61]
LCM_LEDK_2 [61]
C2315
C / 330 / nF / 0201
C0201
R2310
R / 63.4 / K / 0402
R0402
[12] GPIO_LCM_LED_EN
[12] DISP_PWM0
LCM Gate Drive
LCM Gate Driver I2C address: 0X3E (Write:0x7C, Read:0x7D)
PL2304
PL / 4.7 / uH / 2016
L/IND/SMD/VLS201610E
C2311
C / 4.7 / uF / 0402
C0402
U2304
U / NT50358
DSBGA15/SMD/P0.4/B0.25/TPS65132
ENP
ENN
OUTP
OUTN
REG
CFLY1
CFLY2
LCM_AVDD
LCM_AVDD [61]
LCM_AVEE
LCM_AVEE [61]
[12] GPIO_LCM_BIAS_EN
[12,21,61,68] SCL0
[12,21,61,68] SDA0
C2313
C / 10 / uF / 0603 / X5R
C0603
C2314
C / 10 / uF / 0603 / X5R
C0603
C2316
C / 4.7 / uF / 0402
C0402
C2317
C / 10 / uF / 0603 / X5R
C0603
C2313/C2314 and C2317 are suggested to use 10uF for component de-rating consideration.
MEDIATEK
Title
23_POWER_THIRD-PARTY
Size C
MTK Confidential
Date: Thursday, May 15, 2014
Sheet 23 of 99

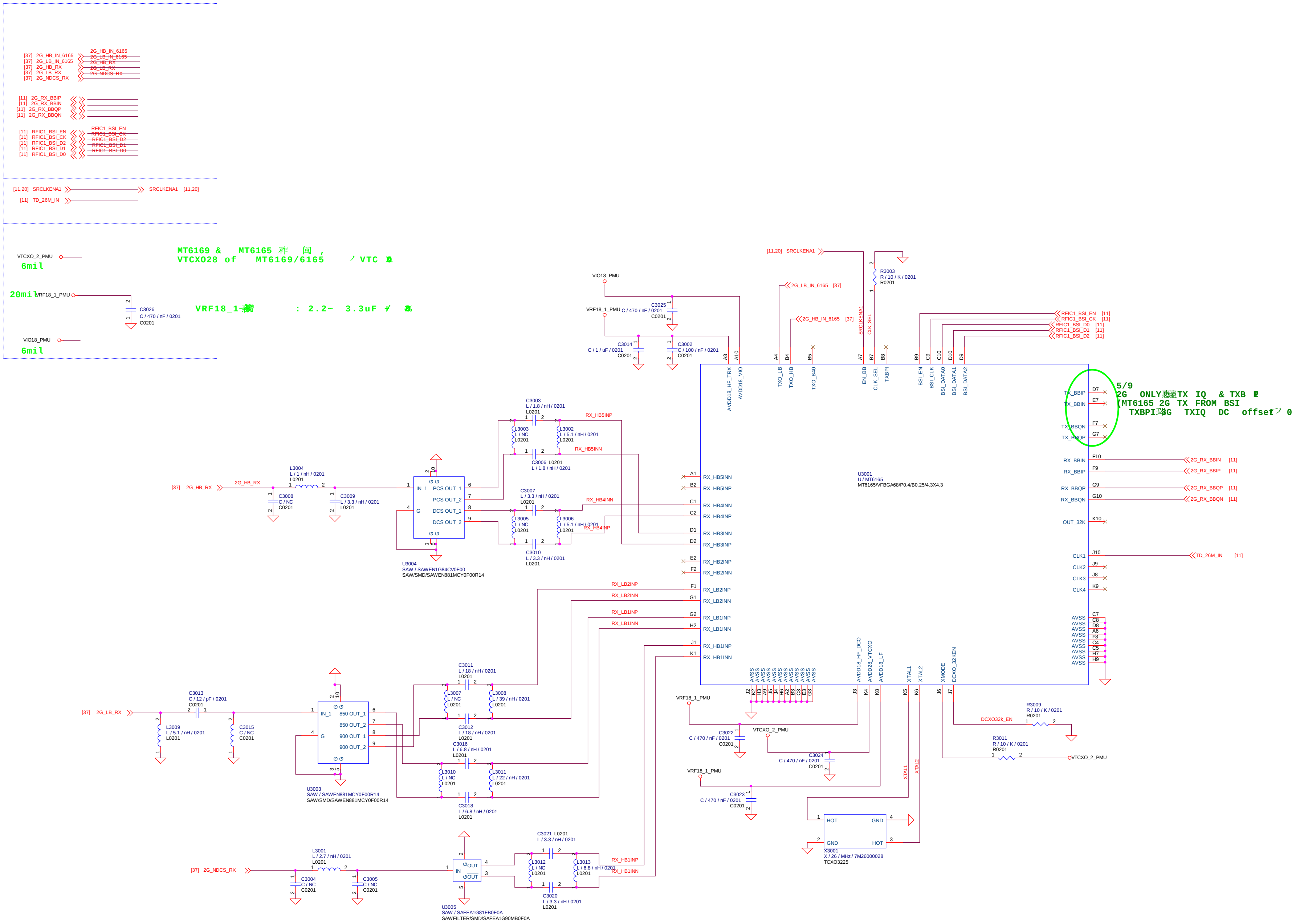

Title: 30_RF_MT6165_2G_TRX

MTK Confidential

Size: C

Date: Thursday, May 15, 2014

Sheet 30 of 99

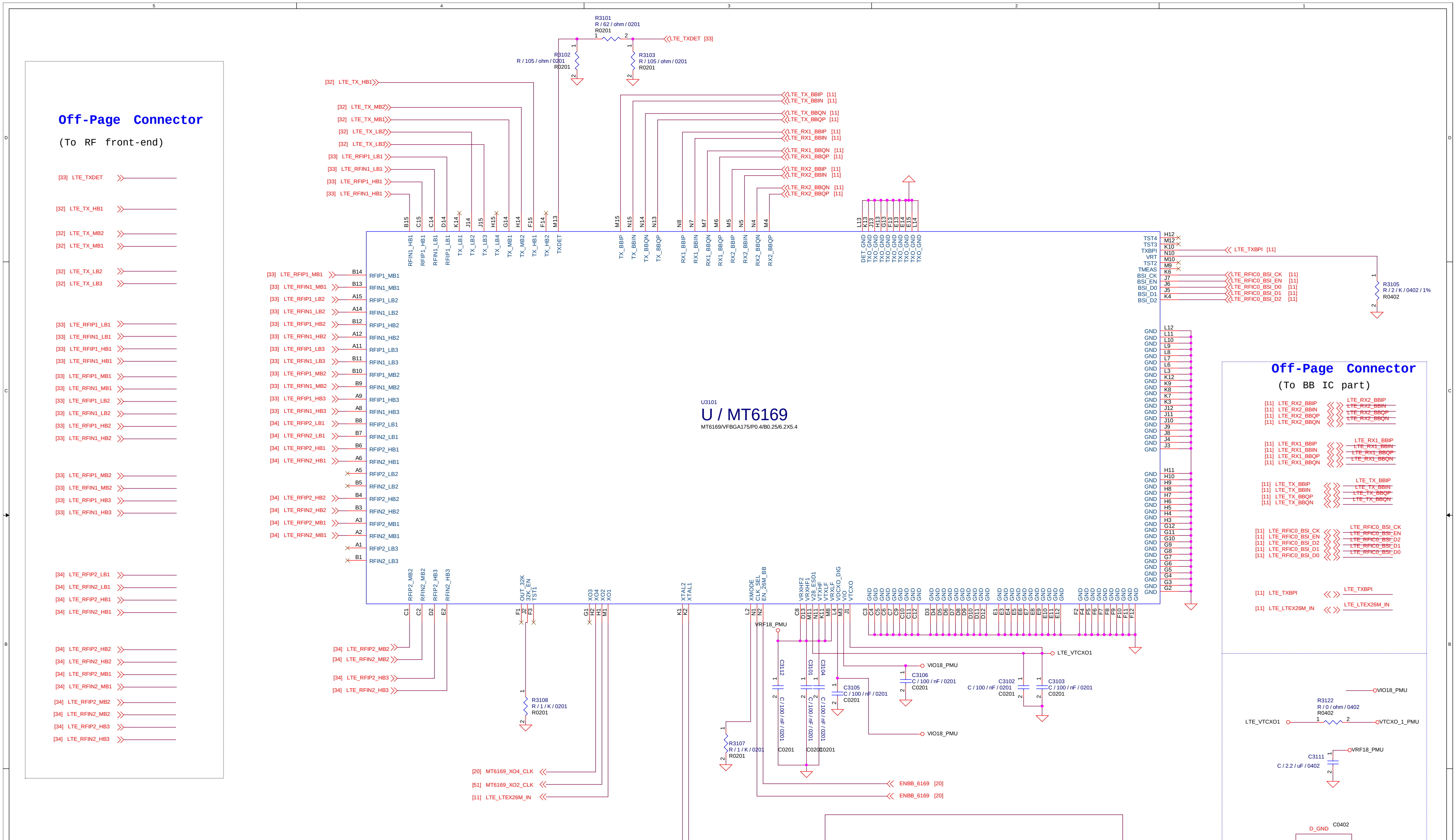

Case	XMODE	VRF_SEL	VTCXO_DIG	EN_26M_BB	CLK_SEL	OUT_32K	XO	XO4	[illegible]
1	0	0	VIO18	0	0	OFF	OFF	OFF	[illegible]
2	0	0		1	0	OFF	26MHz	OFF	
3	0	0		0	1	ON	OFF	26MHz	
4	0	0		1	1	ON	26MHz	26MHz	
5	VIO18	0		0	0	OFF	OFF	OFF	[illegible]
6		0		1	0	OFF	26MHz	OFF	
7		0		0	1	ON	OFF	26MHz	
8		0		1	1	ON	26MHz	26MHz	

MEDIATEK

Title
31_RF_MT6169_PIN_OUT
Size A2
MTK Confidential
Date: Thursday, May 15, 2014 Sheet 31 of 99

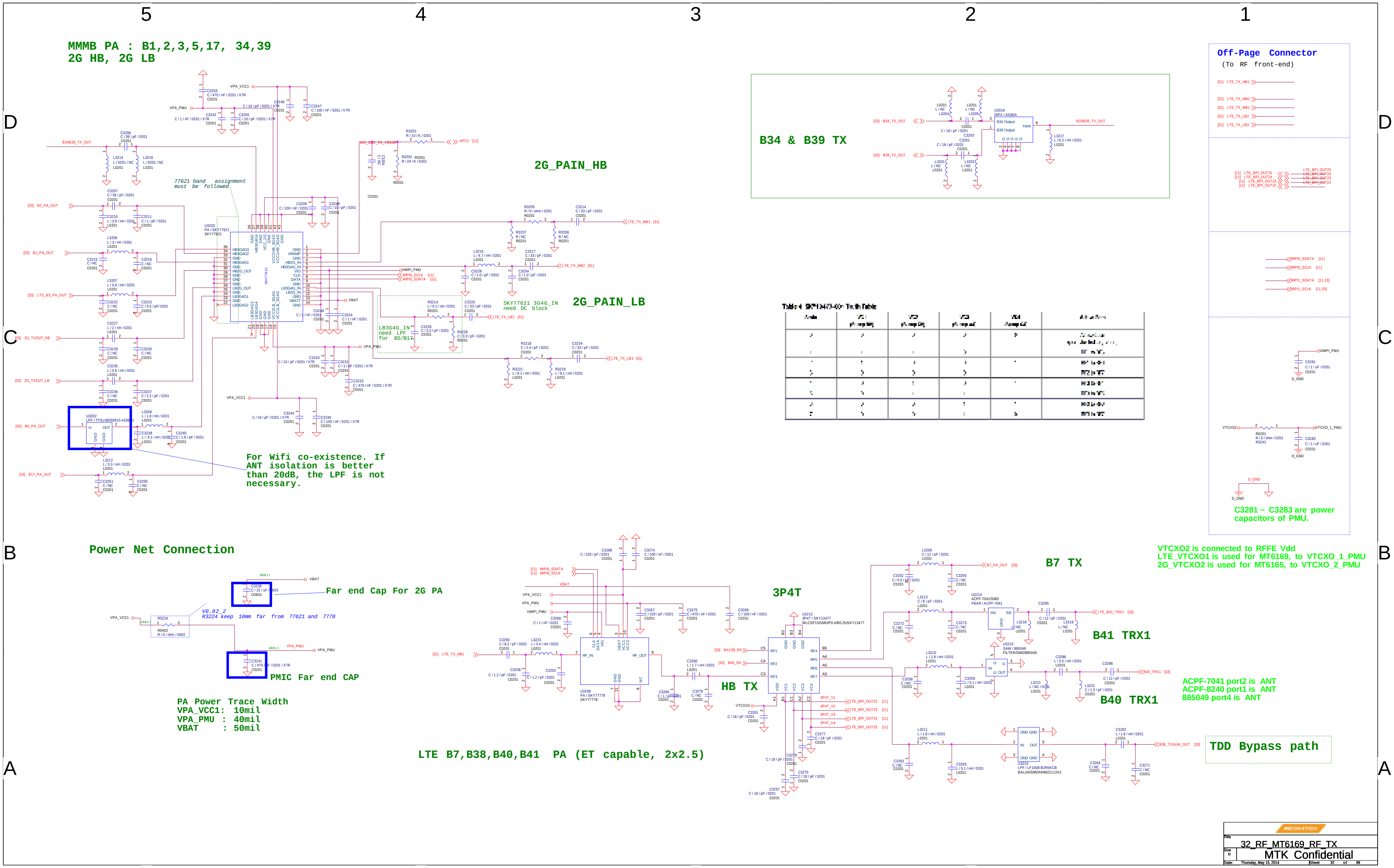
MMMB PA : B1,2,3,5,17, 34,39
2G HB, 2G LB
77621 band assignment must be followed
2G_PAIN_HB
2G_PAIN_LB
SKY77621 3G4G_IN need DC block
LB3G4G_IN need LPF for B5/B17
For Wifi co-existence. If ANT isolation is better than 20dB, the LPF is not necessary.
B34 & B39 TX
Off-Page Connector
(To RF front-end)
C3281 ~ C3283 are power capacitors of PMU.
VTCXO2 is connected to RFFE Vdd
LTE_VTCXO1 is used for MT6169, to VTCXO_1_PMU
2G_VTCXO2 is used for MT6165, to VTCXO_2_PMU
Power Net Connection
Far end Cap For 2G PA
V0.02_2
R3224 keep 10mm far from 77621 and 7778
PMIC Far end CAP
PA Power Trace Width
VPA_VCC1: 10mil
VPA_PMU : 40mil
VBAT : 50mil
3P4T
B7 TX
B41 TRX1
HB TX
B40 TRX1
ACPF-7041 port2 is ANT
ACPF-8240 port1 is ANT
885049 port4 is ANT
TDD Bypass path
LTE B7,B38,B40,B41 PA (ET capable, 2x2.5)
32_RF_MT6169_RF_TX
MTK Confidential
Thursday, May 15, 2014
Sheet 32 of 99

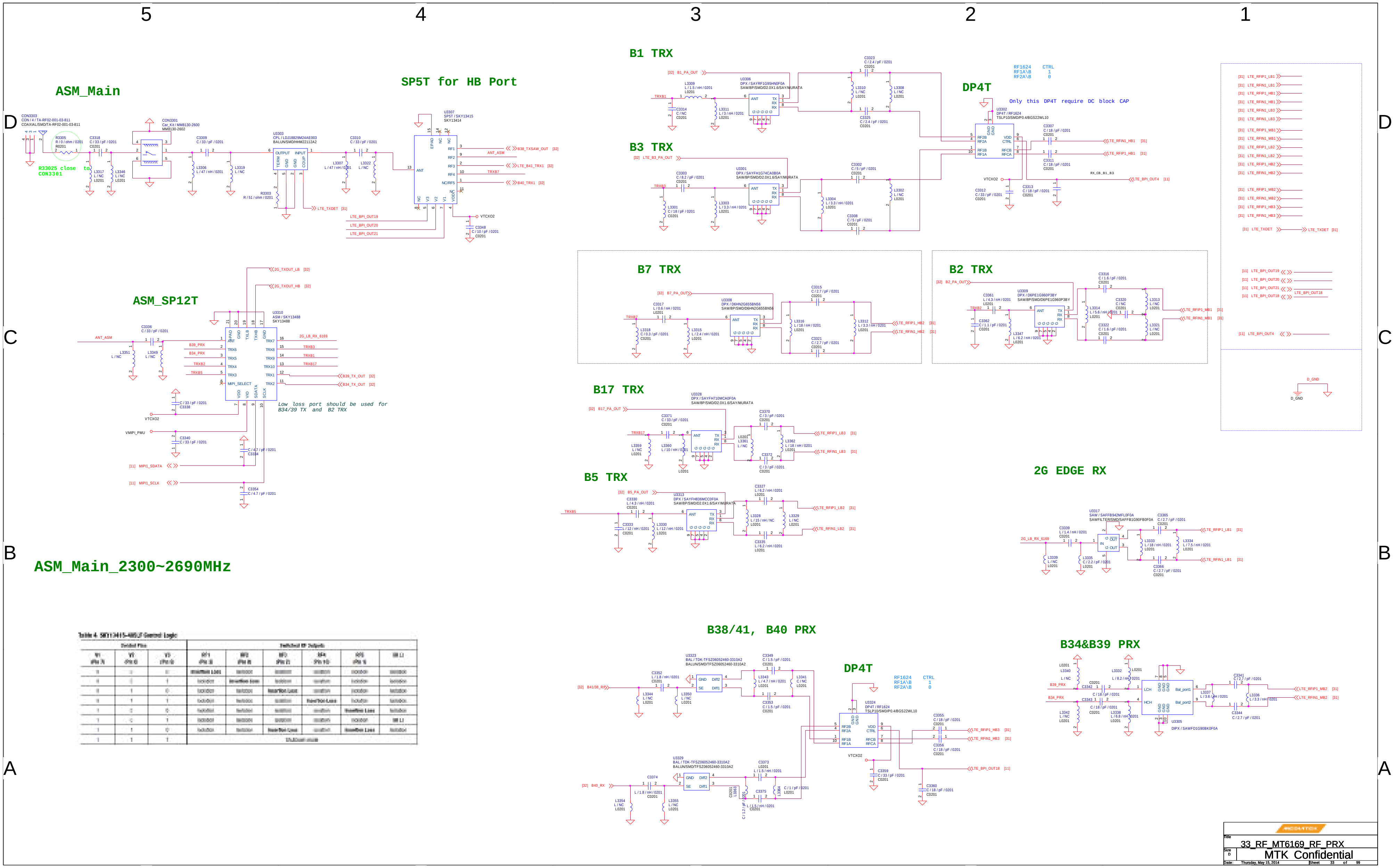
ASM_Main
SP5T for HB Port
B1 TRX
B3 TRX
DP4T
Only this DP4T require DC block CAP
ASM_SP12T
Low loss port should be used for B34/39 TX and B2 TRX
B7 TRX
B2 TRX
B17 TRX
B5 TRX
2G EDGE RX
ASM_Main_2300~2690MHz
B38/41, B40 PRX
DP4T
B34&B39 PRX
33_RF_MT6169_RF_PRX
MTK Confidential
Thursday, May 15, 2014
Sheet 33 of 99

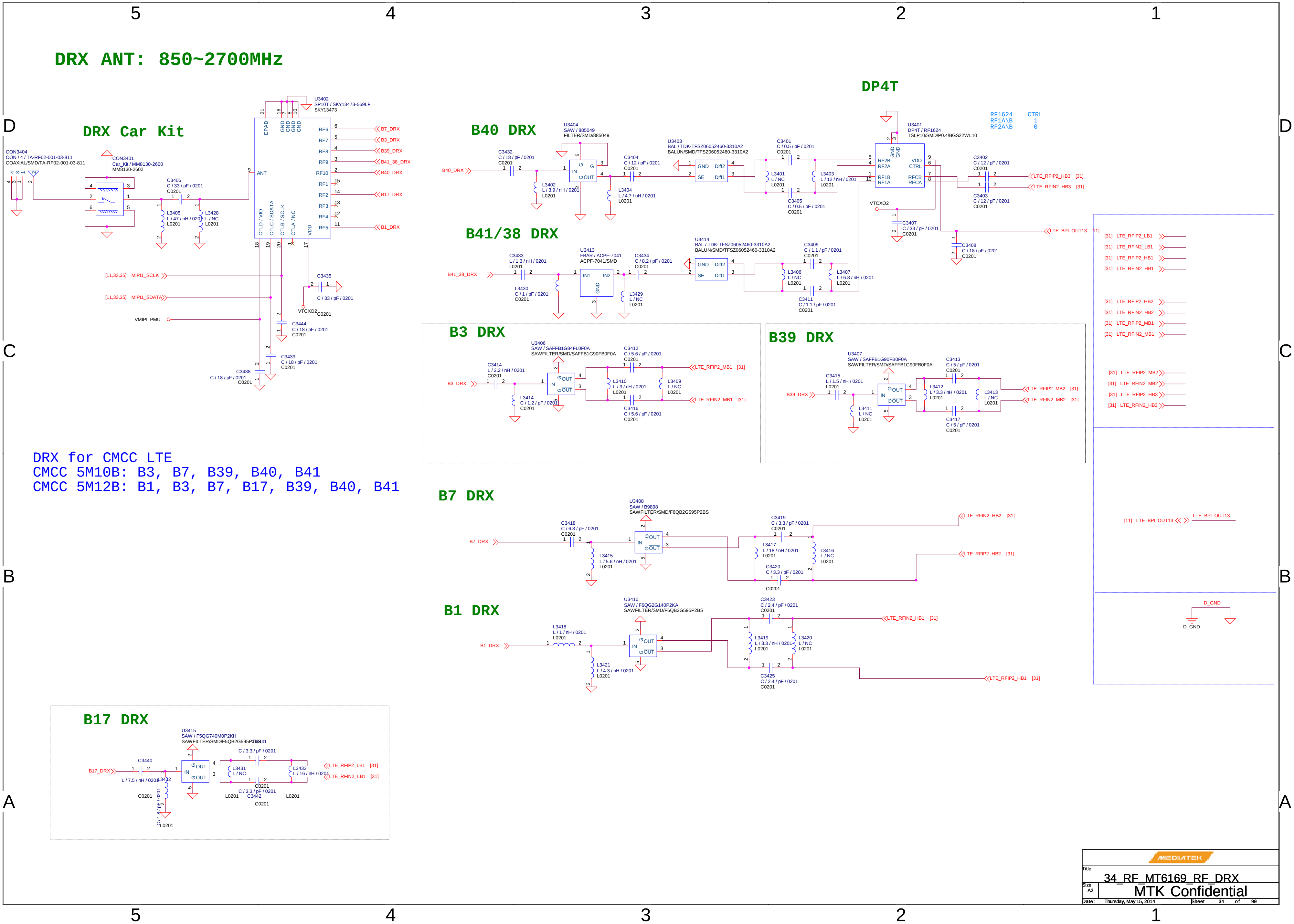

DRX ANT: 850~2700MHz
DRX Car Kit
DP4T
B40 DRX
B41/38 DRX
B3 DRX
B39 DRX
B7 DRX
B1 DRX
B17 DRX
DRX for CMCC LTE
CMCC 5M10B: B3, B7, B39, B40, B41
CMCC 5M12B: B1, B3, B7, B17, B39, B40, B41
U3402 SP10T / SKY13473-569LF SKY13473
U3401 DP4T / RF1624 TSLP10/SMD/P0.4/BGS22WL10
RF1624 CTRL
RF1A\B 1
RF2A\B 0
CON3404 CON / 4 / TA-RF02-001-03-811 COAXIAL/SMD/TA-RF02-001-03-811
CON3401 Car_Kit / MM8130-2600 MM8130-2602
MIPI1_SCLK
MIPI1_SDATA
VMIPI_PMU
VTCXO2
LTE_BPI_OUT13
D_GND
34_RF_MT6169_RF_DRX
MTK Confidential
Thursday, May 15, 2014
Sheet 34 of 99

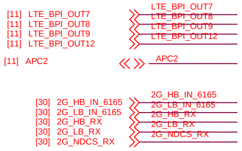

ANT matching

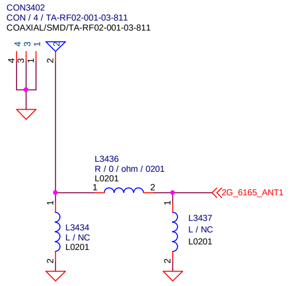

EDGE TXM

SKY77597 control logic table

	TxEN (BPI12)	MODE (BPI9)	BS1 (BPI8)	BS2 (BPI7)
LB_GMSK_TX	H	L	L	H
HB_GMSK_TX	H	L	H	H
LB_EDGE_TX	H	H	L	H
HB_EDGE_TX	H	H	H	H
2G_NDCS_Rx(TRX5)	L	L	H	L
2G_HB_Rx(TRX3)	L	H	L	H
2G_LB_Rx(TRX6)	L	L	L	H
GMSK_Filter	H	L	H	L
EDGE_Filter	H	H	H	L
TRX1	L	H	L	L
TRX4	L	H	H	H

2G TX DCS Notch Filter

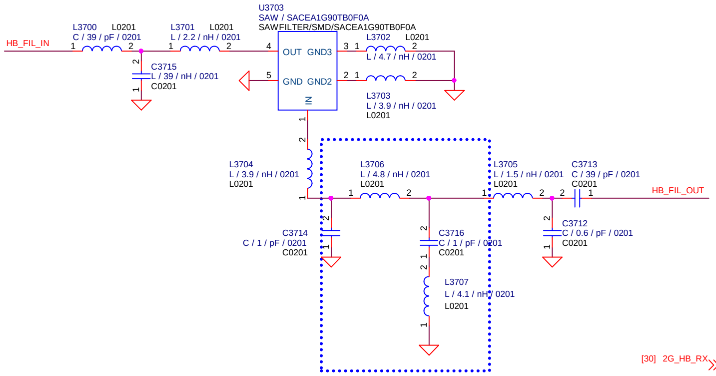

0409: using LC instead of discrete LPF part

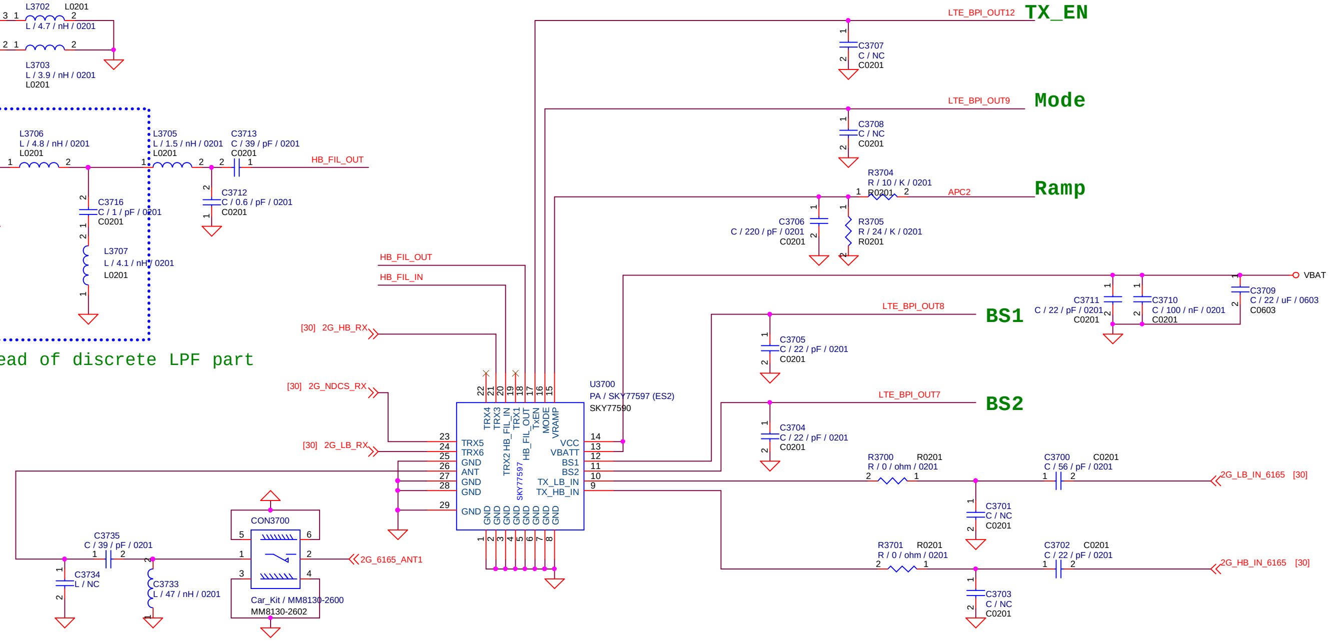

MEDIATEK

Title	37_2G_TRX
Size C	MTK Confidential
Date: Thursday, May 15, 2014	Sheet 37 of 99

SD CARD

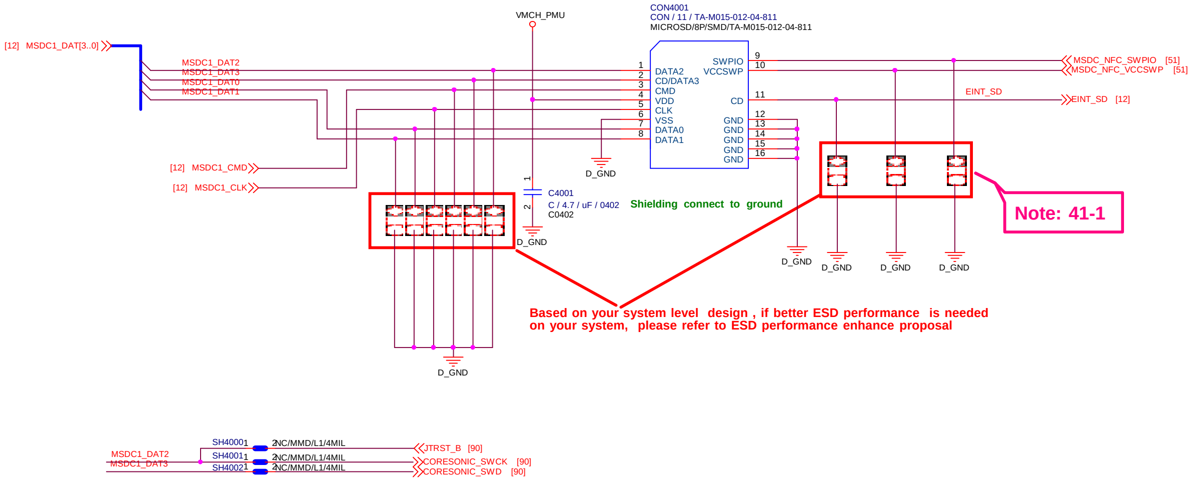

Schematic design notice of "41_MEMORY_SD Card" page.

Note 41-1: The equivalent capacitance of ESD protection device must be <=0.5pF
-- otherwise it will result in NFC card mode function fail.

eMMC+LPDDR3 16GB eMMC + 16Gb LPDDR3

221 Ball, 0.5mm pitch

VDD1=1.8V
VDD2=1.20V
VDDCA=1.2V
VDDQ= 1.20V

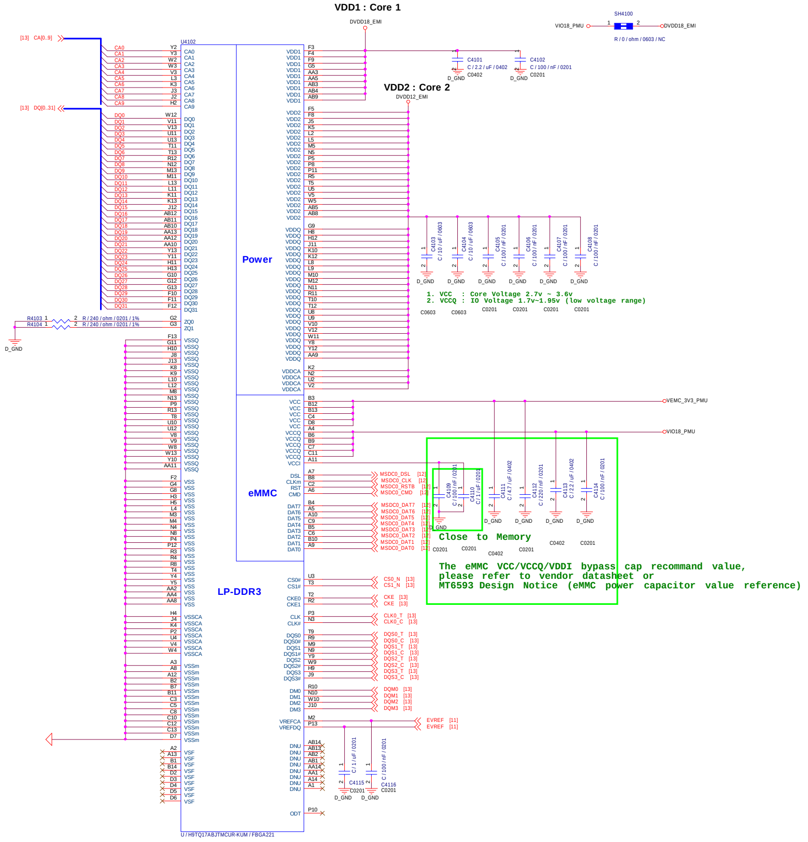

Connect to AP

DQ[0..31]	DQ[0..31]
CA[0..9]	CA[0..9]
CS0_N	CS0_N
CS1_N	CS1_N
CKE	CKE
DQM0	DQM0
DQM1	DQM1
DQM2	DQM2
DQM3	DQM3
DQS0_C	DQS0_C
DQS1_C	DQS1_C
DQS2_C	DQS2_C
DQS3_C	DQS3_C
DQS0_T	DQS0_T
DQS1_T	DQS1_T
DQS2_T	DQS2_T
DQS3_T	DQS3_T
CLK0_T	CLK0_T
CLK0_C	CLK0_C
VREF_CA	VREF_CA
VREF_DQ	VREF_DQ
MSDC0_RSTB	MSDC0_RSTB
MSDC0_CMD	MSDC0_CMD
MSDC0_CLK	MSDC0_CLK
MSDC0_DSL	MSDC0_DSL
MSDC0_DAT0	MSDC0_DAT0
MSDC0_DAT1	MSDC0_DAT1
MSDC0_DAT2	MSDC0_DAT2
MSDC0_DAT3	MSDC0_DAT3
MSDC0_DAT4	MSDC0_DAT4
MSDC0_DAT5	MSDC0_DAT5
MSDC0_DAT6	MSDC0_DAT6
MSDC0_DAT7	MSDC0_DAT7

Power I/F

VIO18_PMU	VIO18_PMU
VEMC_3V3_PMU	VEMC_3V3_PMU
DVDD12_EMI	DVDD12_EMI

Title	41_Memory_eMMC_LPDDR3
Size D	MTK Confidential
Date	Thursday, May 15, 2014 — Sheet 41 of 99

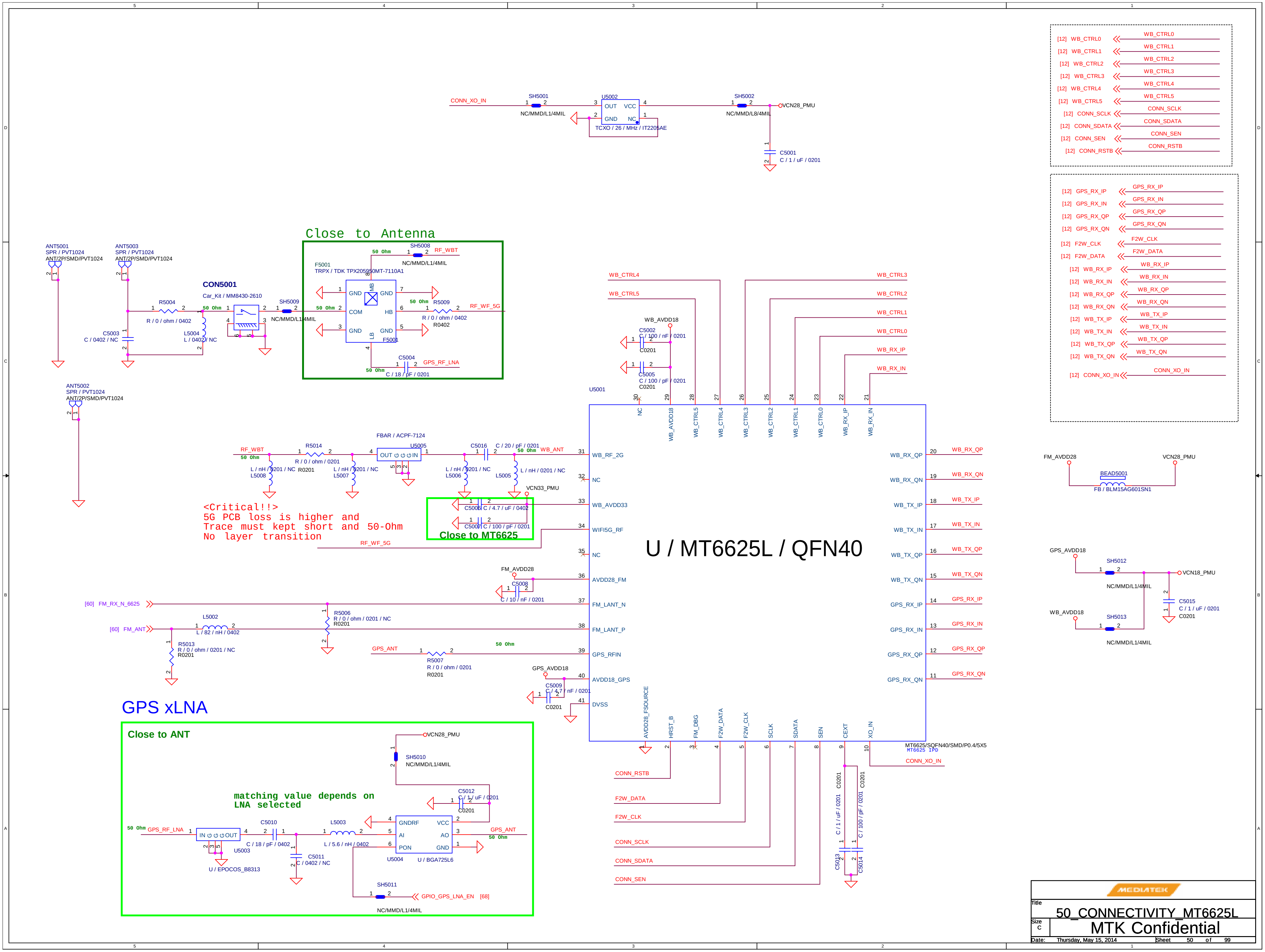

MEDIATEK

Title: 50_CONNECTIVITY_MT6625L

Size: C

MTK Confidential

Date: Thursday, May 15, 2014 | Sheet 50 of 99

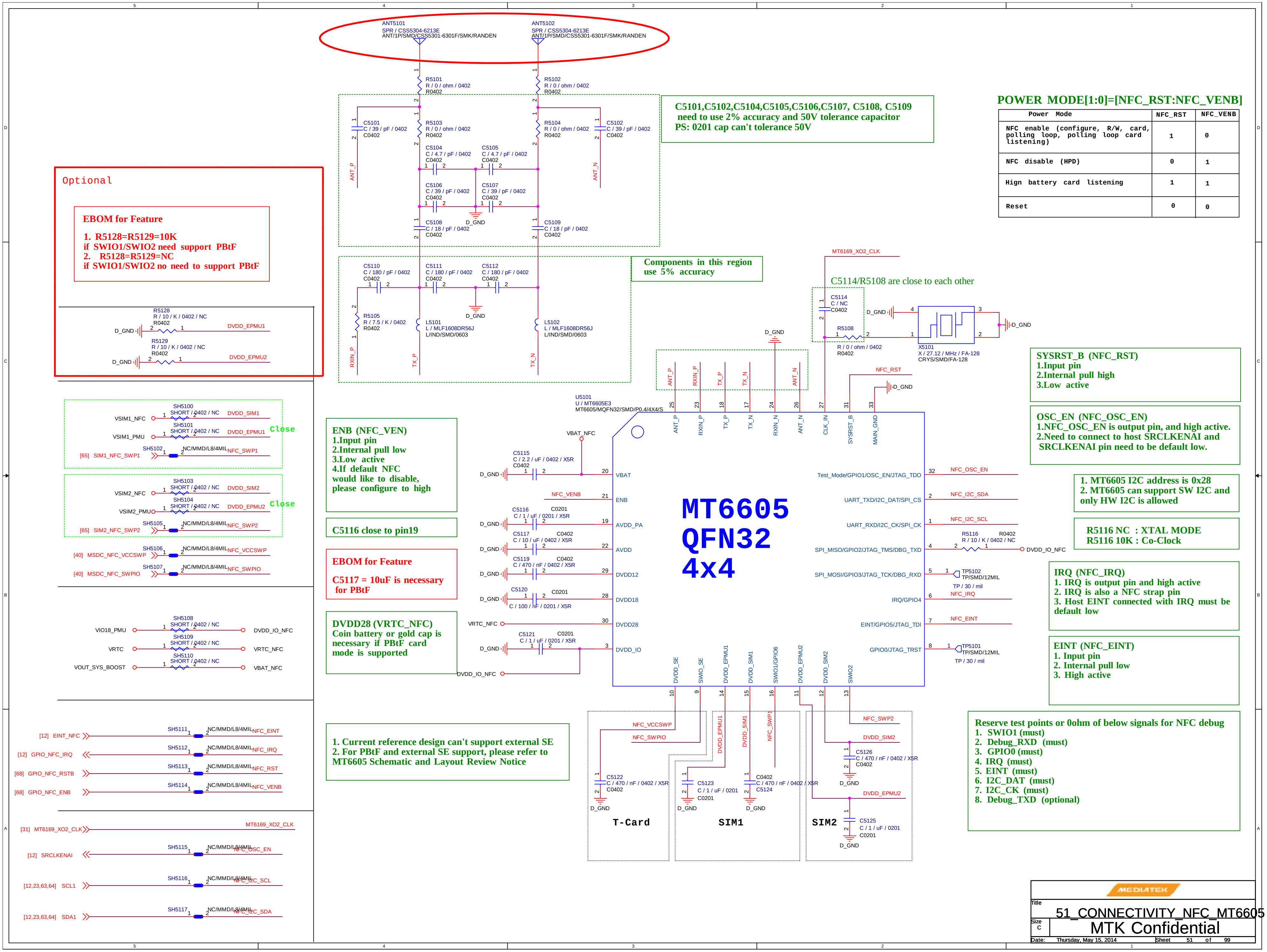

ANT5101
SPR / CSS5304-6213E
ANT/1P/SMD/CSS5301-6301F/SMK/RANDEN
ANT5102
SPR / CSS5304-6213E
ANT/1P/SMD/CSS5301-6301F/SMK/RANDEN
R5101
R / 0 / ohm / 0402
R5102
R / 0 / ohm / 0402
C5101
C / 39 / pF / 0402
R5103
R / 0 / ohm / 0402
R5104
R / 0 / ohm / 0402
C5102
C / 39 / pF / 0402
C5104
C / 4.7 / pF / 0402
C5105
C / 4.7 / pF / 0402
C5106
C / 39 / pF / 0402
C5107
C / 39 / pF / 0402
C5108
C / 18 / pF / 0402
C5109
C / 18 / pF / 0402
ANT_P
ANT_N
D_GND
C5101,C5102,C5104,C5105,C5106,C5107, C5108, C5109
need to use 2% accuracy and 50V tolerance capacitor
PS: 0201 cap can't tolerance 50V
POWER MODE[1:0]=[NFC_RST:NFC_VENB]
Power Mode | NFC_RST | NFC_VENB
NFC enable (configure, R/W, card, polling loop, polling loop card listening) | 1 | 0
NFC disable (HPD) | 0 | 1
Hign battery card listening | 1 | 1
Reset | 0 | 0
Optional
EBOM for Feature
1. R5128=R5129=10K
if SWIO1/SWIO2 need support PBtF
2. R5128=R5129=NC
if SWIO1/SWIO2 no need to support PBtF
R5128
R / 10 / K / 0402 / NC
DVDD_EPMU1
R5129
R / 10 / K / 0402 / NC
DVDD_EPMU2
C5110
C / 180 / pF / 0402
C5111
C / 180 / pF / 0402
C5112
C / 180 / pF / 0402
R5105
R / 7.5 / K / 0402
L5101
L / MLF1608DR56J
L/IND/SMD/0603
L5102
L / MLF1608DR56J
L/IND/SMD/0603
RXIN_P
TX_P
TX_N
Components in this region
use 5% accuracy
MT6169_XO2_CLK
C5114/R5108 are close to each other
C5114
C / NC
R5108
R / 0 / ohm / 0402
X5101
X / 27.12 / MHz / FA-128
CRYS/SMD/FA-128
SYSRST_B (NFC_RST)
1.Input pin
2.Internal pull high
3.Low active
OSC_EN (NFC_OSC_EN)
1.NFC_OSC_EN is output pin, and high active.
2.Need to connect to host SRCLKENAI and
SRCLKENAI pin need to be default low.
1. MT6605 I2C address is 0x28
2. MT6605 can support SW I2C and
only HW I2C is allowed
R5116 NC : XTAL MODE
R5116 10K : Co-Clock
IRQ (NFC_IRQ)
1. IRQ is output pin and high active
2. IRQ is also a NFC strap pin
3. Host EINT connected with IRQ must be
default low
EINT (NFC_EINT)
1. Input pin
2. Internal pull low
3. High active
U5101
U / MT6605E3
MT6605/MQFN32/SMD/P0.4/4X4/S
MT6605
QFN32
4x4
VBAT
ENB
AVDD_PA
AVDD
DVDD12
DVDD18
DVDD28
DVDD_IO
Test_Mode/GPIO1/OSC_EN/JTAG_TDO
UART_TXD/I2C_DAT/SPI_CS
UART_RXD/I2C_CK/SPI_CK
SPI_MISO/GPIO2/JTAG_TMS/DBG_TXD
SPI_MOSI/GPIO3/JTAG_TCK/DBG_RXD
IRQ/GPIO4
EINT/GPIO5/JTAG_TDI
GPIO0/JTAG_TRST
NFC_OSC_EN
NFC_I2C_SDA
NFC_I2C_SCL
NFC_IRQ
NFC_EINT
NFC_RST
NFC_VENB
VBAT_NFC
VRTC_NFC
DVDD_IO_NFC
C5115
C / 2.2 / uF / 0402 / X5R
C5116
C / 1 / uF / 0201 / X5R
C5117
C / 10 / uF / 0402 / X5R
C5119
C / 470 / nF / 0402 / X5R
C5120
C / 100 / nF / 0201 / X5R
C5121
C / 1 / uF / 0201 / X5R
TP5102
TP/SMD/12MIL
TP / 30 / mil
TP5101
TP/SMD/12MIL
TP / 30 / mil
ENB (NFC_VEN)
1.Input pin
2.Internal pull low
3.Low active
4.If default NFC
would like to disable,
please configure to high
C5116 close to pin19
EBOM for Feature
C5117 = 10uF is necessary
for PBtF
DVDD28 (VRTC_NFC)
Coin battery or gold cap is
necessary if PBtF card
mode is supported
SH5100
SHORT / 0402 / NC
VSIM1_NFC
DVDD_SIM1
SH5101
VSIM1_PMU
DVDD_EPMU1
Close
SH5102
[65] SIM1_NFC_SWP1
NC/MMD/L8/4MIL
NFC_SWP1
SH5103
VSIM2_NFC
DVDD_SIM2
SH5104
VSIM2_PMU
DVDD_EPMU2
Close
SH5105
[65] SIM2_NFC_SWP2
NFC_SWP2
SH5106
[40] MSDC_NFC_VCCSWP
NFC_VCCSWP
SH5107
[40] MSDC_NFC_SWPIO
NFC_SWPIO
SH5108
VIO18_PMU
DVDD_IO_NFC
SH5109
VRTC
VRTC_NFC
SH5110
VOUT_SYS_BOOST
VBAT_NFC
SH5111
[12] EINT_NFC
NFC_EINT
SH5112
[12] GPIO_NFC_IRQ
NFC_IRQ
SH5113
[68] GPIO_NFC_RSTB
NFC_RST
SH5114
[68] GPIO_NFC_ENB
NFC_VENB
[31] MT6169_XO2_CLK
MT6169_XO2_CLK
SH5115
[12] SRCLKENAI
NFC_OSC_EN
SH5116
[12,23,63,64] SCL1
NFC_I2C_SCL
SH5117
[12,23,63,64] SDA1
NFC_I2C_SDA
1. Current reference design can't support external SE
2. For PBtF and external SE support, please refer to
MT6605 Schematic and Layout Review Notice
C5122
C / 470 / nF / 0402 / X5R
C5123
C / 1 / uF / 0201
C5124
C / 470 / nF / 0402 / X5R
C5126
C / 470 / nF / 0402 / X5R
C5125
C / 1 / uF / 0201
T-Card
SIM1
SIM2
Reserve test points or 0ohm of below signals for NFC debug
1. SWIO1 (must)
2. Debug_RXD (must)
3. GPIO0 (must)
4. IRQ (must)
5. EINT (must)
6. I2C_DAT (must)
7. I2C_CK (must)
8. Debug_TXD (optional)
MEDIATEK
Title
51_CONNECTIVITY_NFC_MT6605
Size C
MTK Confidential
Date: Thursday, May 15, 2014
Sheet 51 of 99

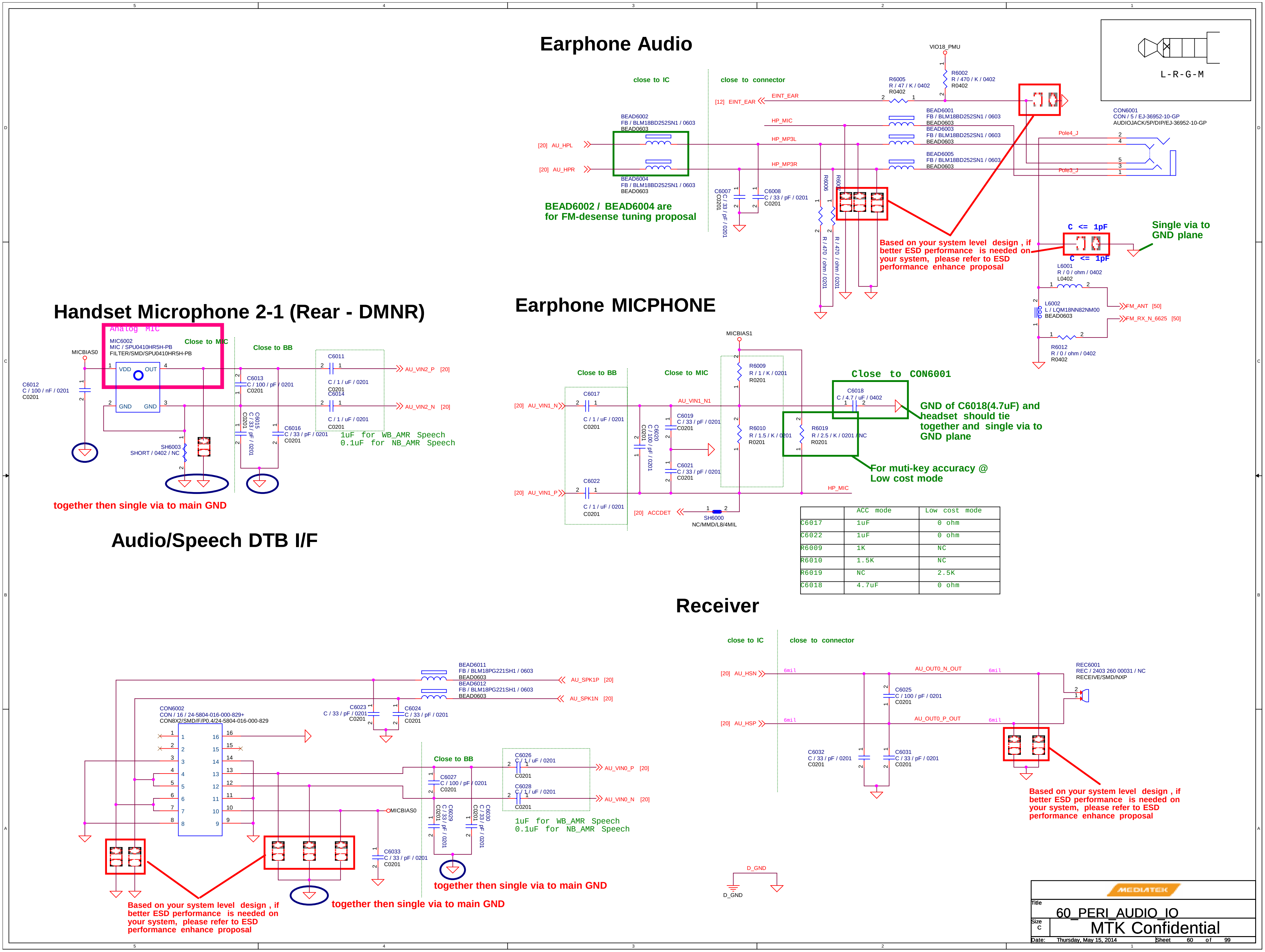

	ACC mode	Low cost mode
C6017	1uF	0 ohm
C6022	1uF	0 ohm
R6009	1K	NC
R6010	1.5K	NC
R6019	NC	2.5K
C6018	4.7uF	0 ohm

MEDIATEK

Title: 60_PERI_AUDIO_IO

Size: C — MTK Confidential

Date: Thursday, May 15, 2014 — Sheet 60 of 99

CTP

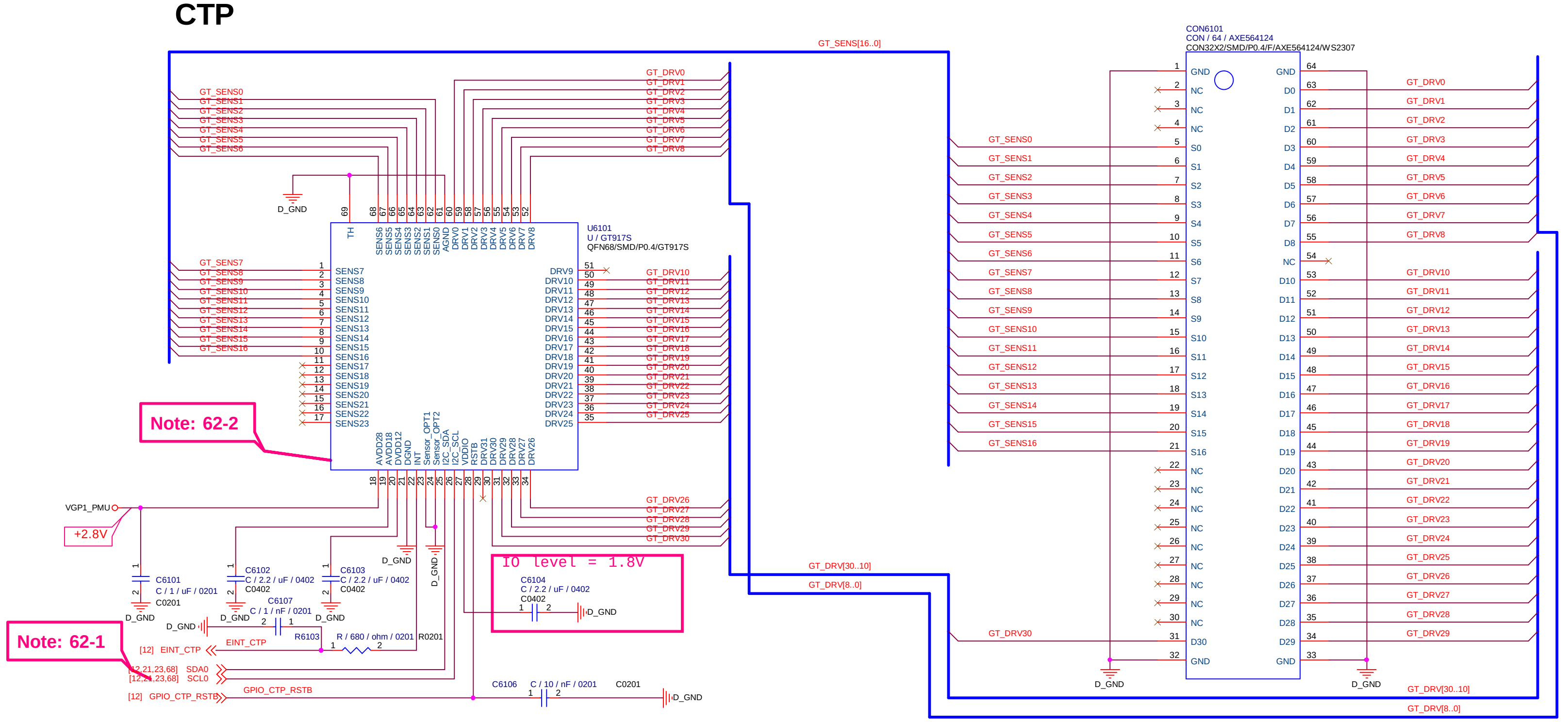

Main LCM

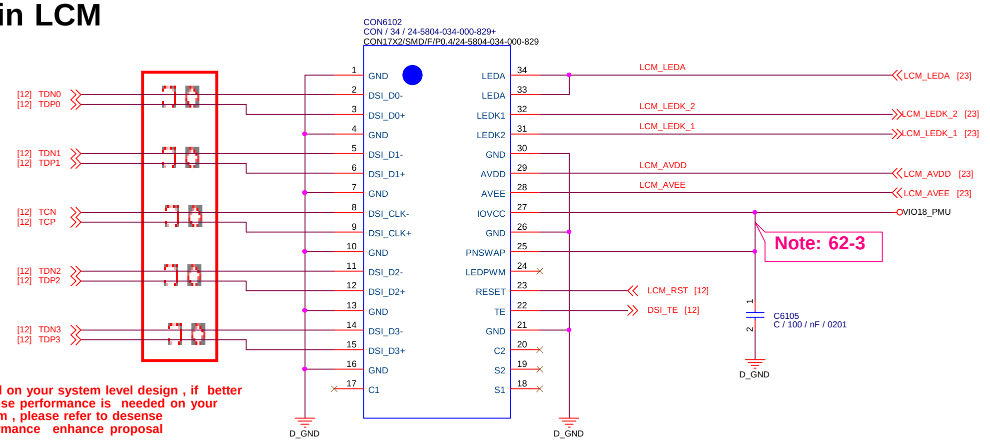

Based on your system level design , if better densense performance is needed on your system , please refer to densense performance enhance proposal

Schematic design notice of "62_PERI_LCD_CTP" page.

Note 62-1: GT917S I2C address: 0X5D (Write:0xBA, Read:0xBB)

Note 62-2: Connect GT917S's "Sensor_OPT1 & 2" pins to GND for COB application. GT917S's INT pin CANNOT be pulled-up.

Note 62-3: PNSWAP are used for the polarity swap of MIPI. PNSWAP=IOVCC => DP=DP,DN=DN;

Rear Camera

Rear camera (IMX135) I2C address: 0X10 (Write:0x20, Read:0x21)
AF driver (DW9714A) I2C address: 0X18 (Write:0x30, Read:0x31)

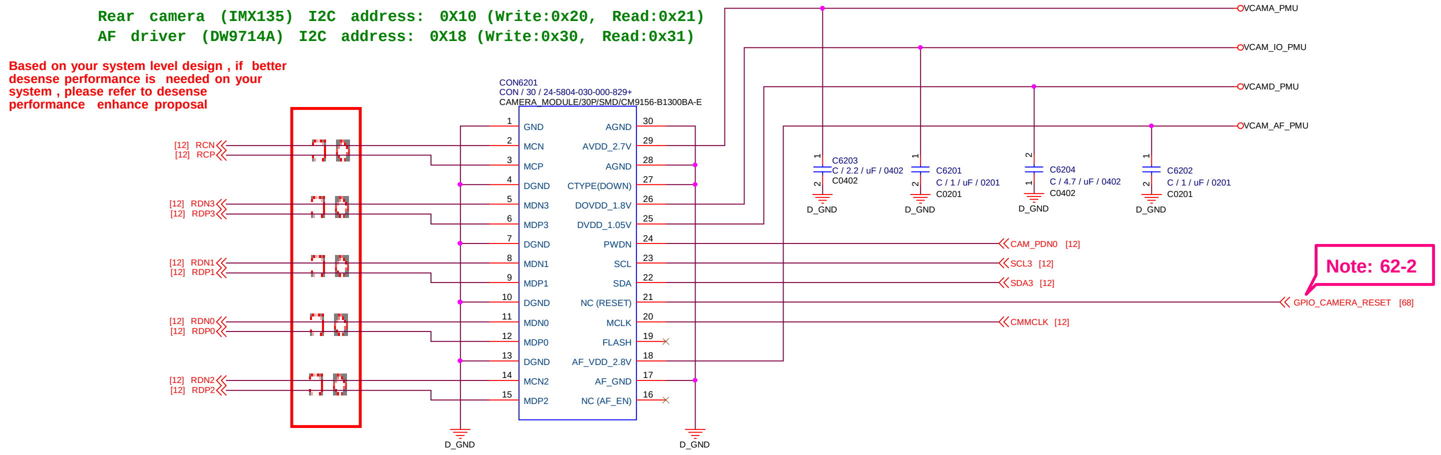

Front Camera

Front camera (OV5648) I2C address: 0X36 (Write:0x6C, Read:0x6D)
AF driver (AD5820) I2C address: 0X0C (Write:0x18, Read:0x19)

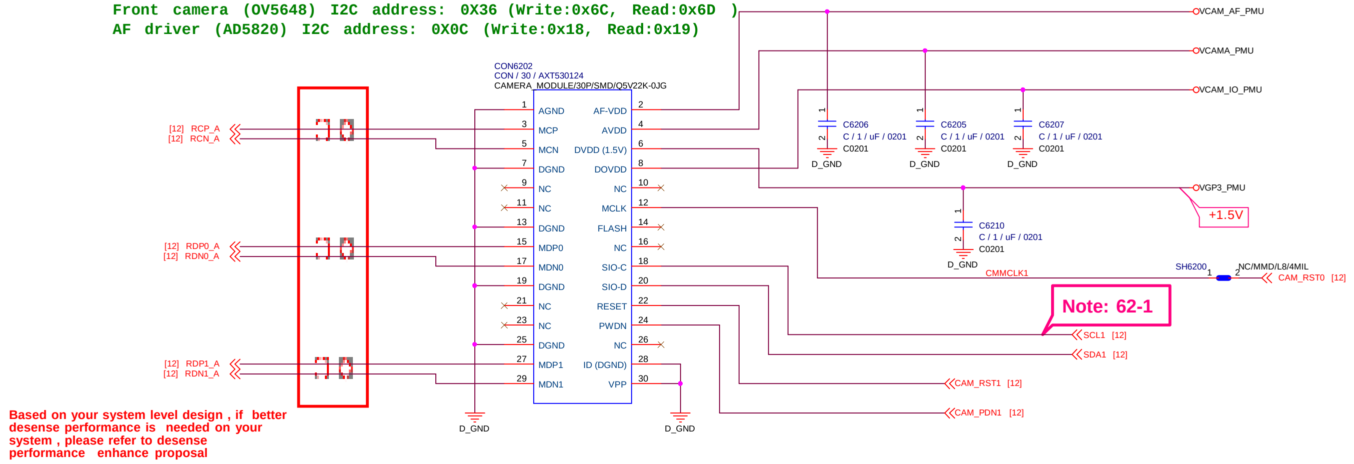

Schematic design notice of "63_PERI_CAMERA_KEYPAD" page.

Note 62-1: The VCC of I2C_3 is pulled to "VIO18_PMU".

Note 62-2: 16M Camera sensor will pull this PIN to GND, (13M is NC)

MEDIATEK

Title
62_PERI_CAMERA

Size C
MTK Confidential

Date: Thursday, May 15, 2014 Sheet 62 of 99

M-Sensor

M-Sensor I2C Address: 0x0C (Write:0x18, Read:0x19)

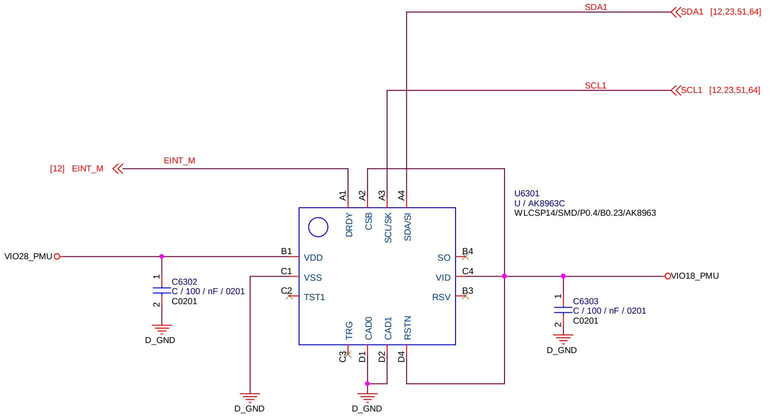

Accerometer + Gyro Sensor

A+Gyro I2C Address: 0x68 (Write:0xD0, Read:0xD1)

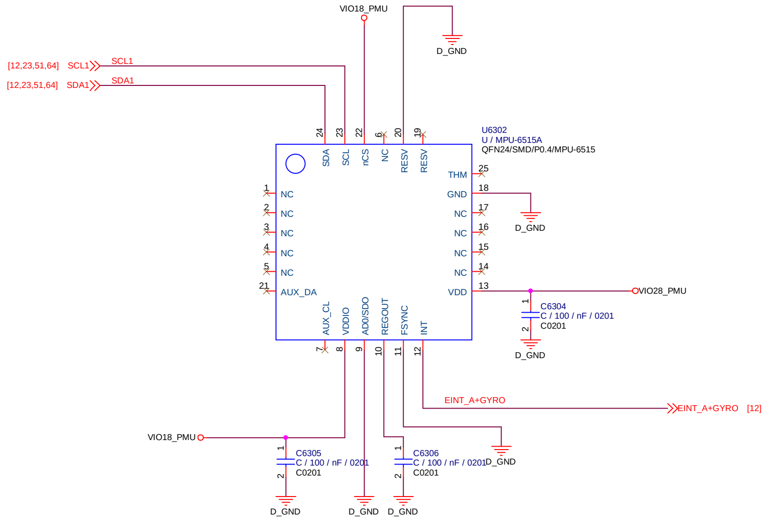

Pressure Sensor

Baro I2C address: 0X77 (Write:0xEE, Read:0xEF)

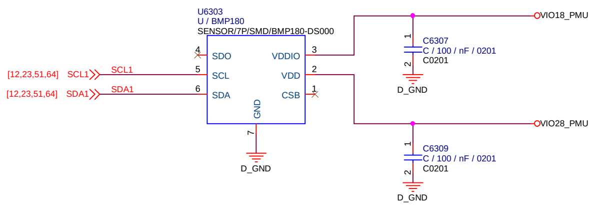

RGB & PS Sensor

CM36652 / RGB + PS I2C address: 0X60 (Write:0xC0, Read:0xC1)

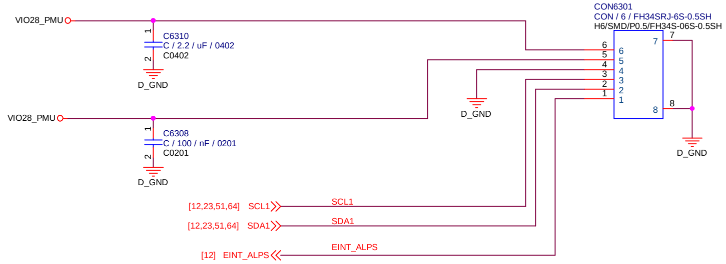

Thermistor / To sense board level temperature

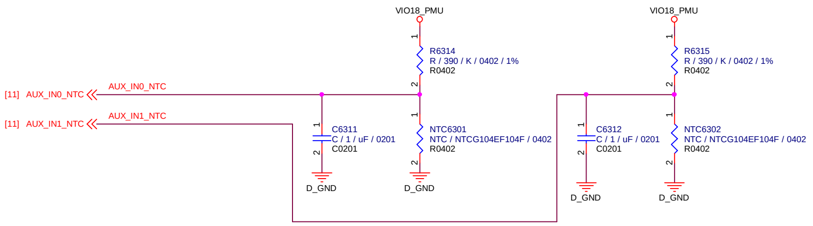

MEDIATEK

Title: 63_PERI_SENSORS

Size: C

MTK Confidential

Date: Thursday, May 15, 2014 | Sheet 63 of 99

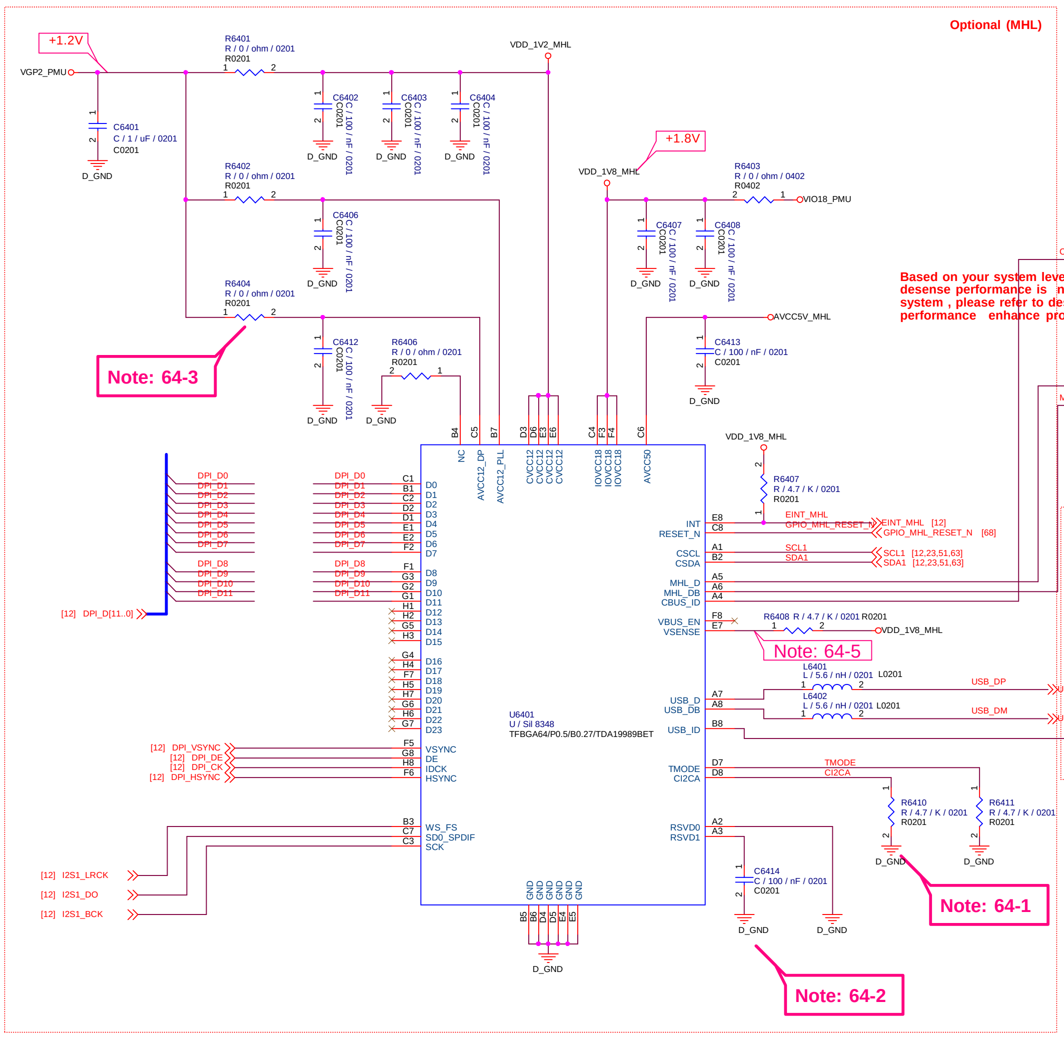

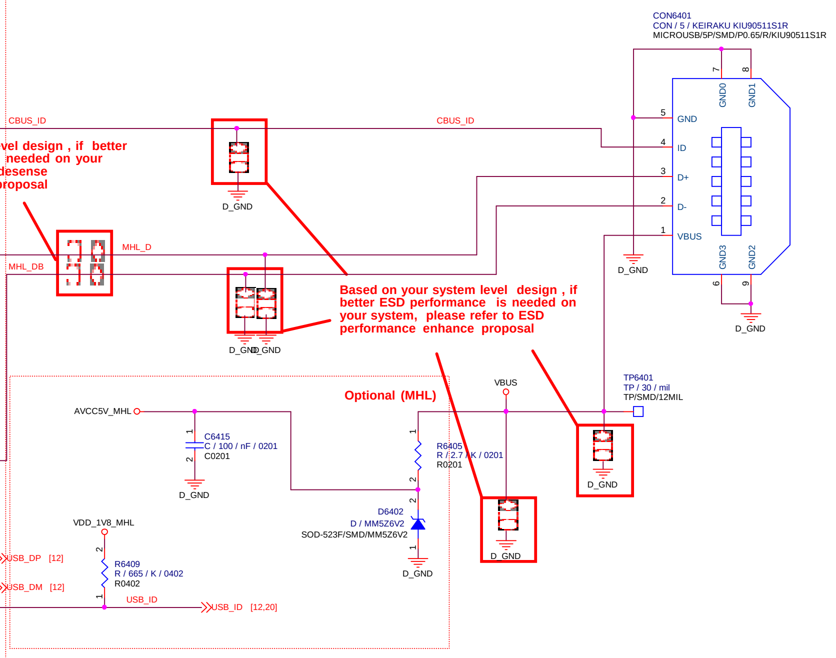

Schematic design notice of "64_PERI_USB_MHL" page.

Note 64-1: CI2CA High : MHL I2C Address = 0x3B/3F/4F. (Write:0x76/7E/9E, Read:0x77/7F/9F)
CI2CA Low : MHL I2C Address = 0x39/3D/4D. (Write:0x72/7A/9A, Read:0x73/7B/9B)

Note 64-2: 1.To reserve one 0.1uF cap to GND in serial connection for ball A3.

Note 64-3: 1. Please do not share the power input among CVCC12, AVCC12_PLL and AVCC12_DP. Add bead for both two analog power pin.
2. Please add 10Kohm resistor to GND for NC ball B4.

Note 64-4: Please add one CMC on MHL diff pair which could help filter the noise and increase the clock/data rise/fall time.

Note 64-5: Please connect 1V8 for ball E7

MEDIATEK

Title: 64_PERI_USB_MHL

Size: C — MTK Confidential

Date: Thursday, May 15, 2014 Sheet 64 of 99

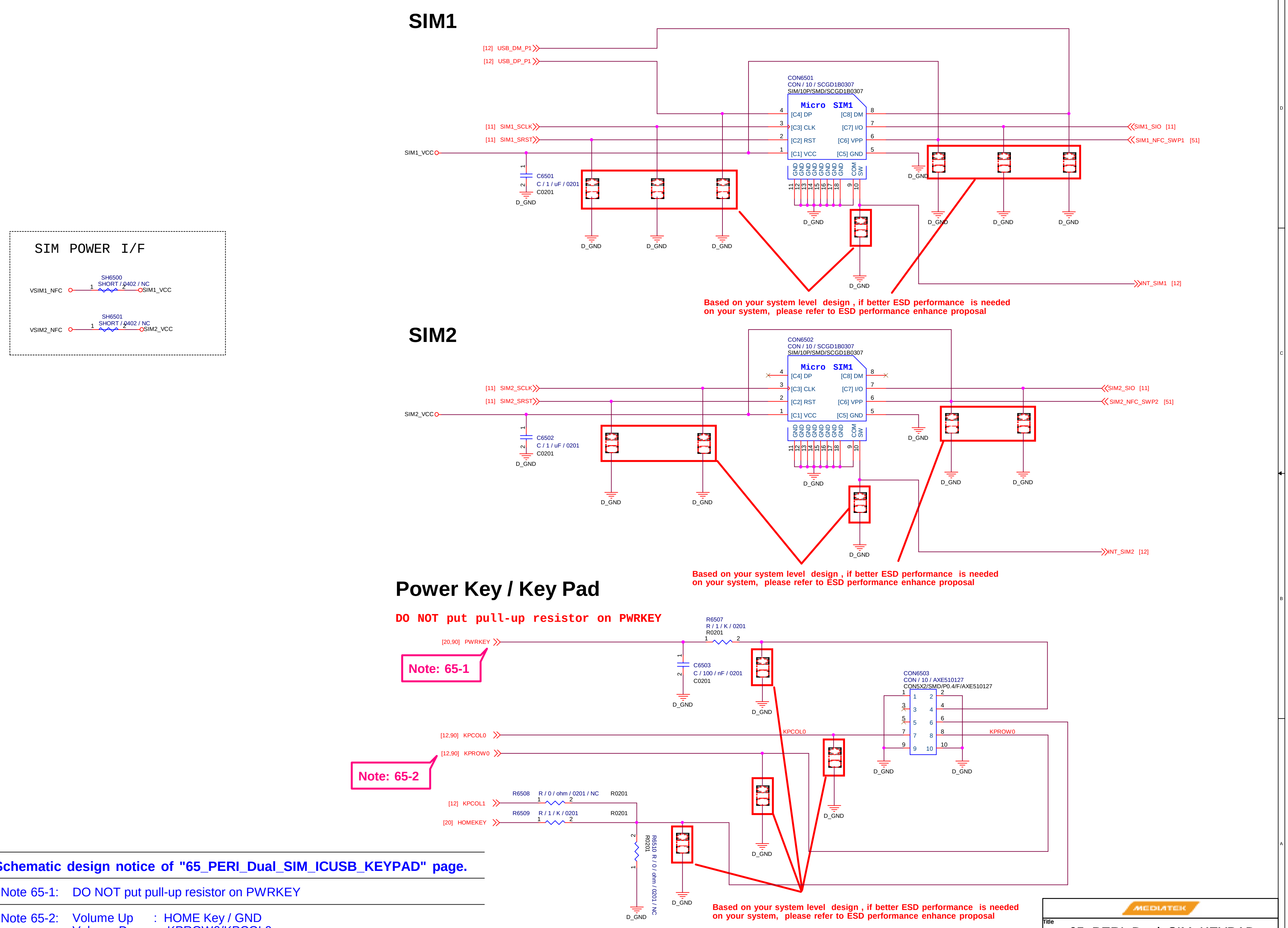

Schematic design notice of "65_PERI_Dual_SIM_ICUSB_KEYPAD" page.

Note 65-1: DO NOT put pull-up resistor on PWRKEY

Note 65-2: Volume Up : HOME Key / GND
Volume Down : KPROW0/KPCOL0

MEDIATEK

Title: 65_PERI_Dual_SIM_KEYPAD

Size: C

MTK Confidential

Date: Thursday, May 15, 2014 Sheet 65 of 99

VIBRATOR

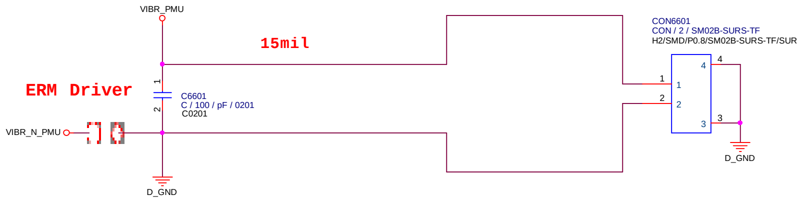

Title: 66_PERI_VIBRATOR

Size: C

MTK Confidential

Date: Thursday, May 15, 2014 Sheet 66 of 99

MT6306 / GPIO extender I2C address: 0X64 (Write:0xC8, Read:0xC9)

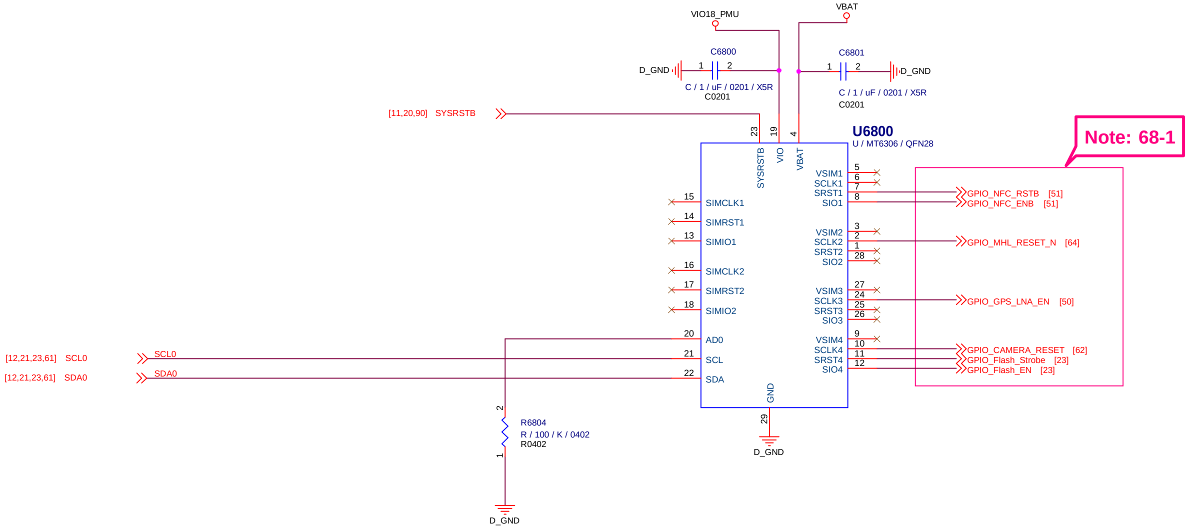

Schematic design notice of "68_PERI_MT6306_IO" page.

Note 68-1: AP GPIO not enough for MHL feature, need to add GPIO expander

Title	68_PERI_MT6306_IO
Size C	MTK Confidential
Date: Thursday, May 15, 2014	Sheet 68 of 99

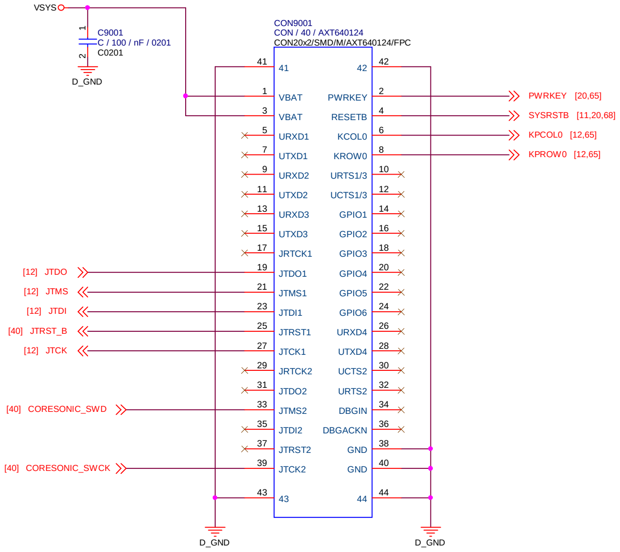

MEDIATEK

Title
90_DEBUG_IO

Size C

MTK Confidential

Date: Thursday, May 15, 2014 Sheet 90 of 99

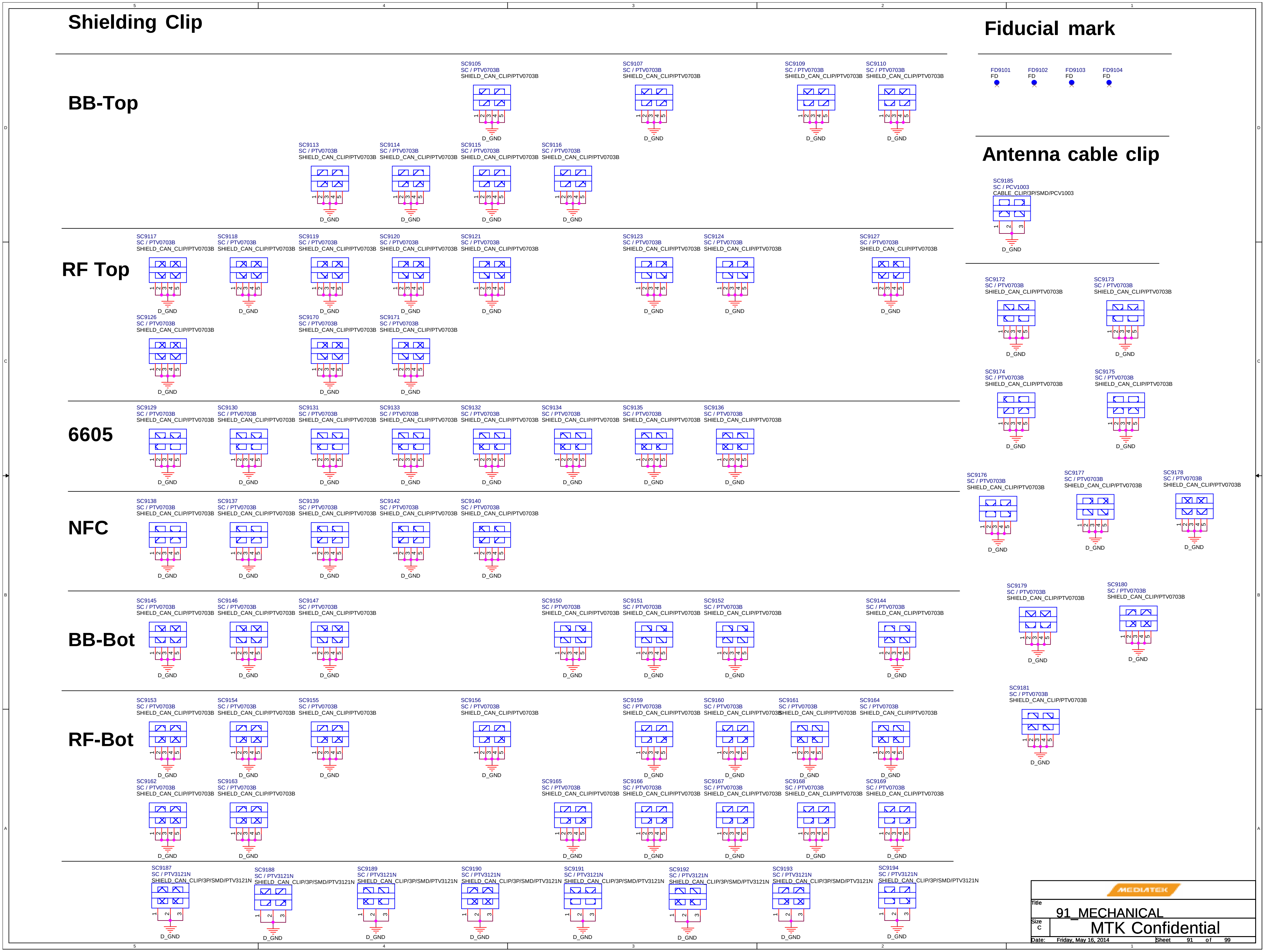
Shielding Clip
BB-Top
SC9105 SC / PTV0703B SHIELD_CAN_CLIP/PTV0703B D_GND
SC9107 SC / PTV0703B SHIELD_CAN_CLIP/PTV0703B D_GND
SC9109 SC / PTV0703B SHIELD_CAN_CLIP/PTV0703B D_GND
SC9110 SC / PTV0703B SHIELD_CAN_CLIP/PTV0703B D_GND
SC9113 SC / PTV0703B SHIELD_CAN_CLIP/PTV0703B D_GND
SC9114 SC / PTV0703B SHIELD_CAN_CLIP/PTV0703B D_GND
SC9115 SC / PTV0703B SHIELD_CAN_CLIP/PTV0703B D_GND
SC9116 SC / PTV0703B SHIELD_CAN_CLIP/PTV0703B D_GND
RF Top
SC9117 SC / PTV0703B SHIELD_CAN_CLIP/PTV0703B D_GND
SC9118 SC / PTV0703B SHIELD_CAN_CLIP/PTV0703B D_GND
SC9119 SC / PTV0703B SHIELD_CAN_CLIP/PTV0703B D_GND
SC9120 SC / PTV0703B SHIELD_CAN_CLIP/PTV0703B D_GND
SC9121 SC / PTV0703B SHIELD_CAN_CLIP/PTV0703B D_GND
SC9123 SC / PTV0703B SHIELD_CAN_CLIP/PTV0703B D_GND
SC9124 SC / PTV0703B SHIELD_CAN_CLIP/PTV0703B D_GND
SC9127 SC / PTV0703B SHIELD_CAN_CLIP/PTV0703B D_GND
SC9126 SC / PTV0703B SHIELD_CAN_CLIP/PTV0703B D_GND
SC9170 SC / PTV0703B SHIELD_CAN_CLIP/PTV0703B D_GND
SC9171 SC / PTV0703B SHIELD_CAN_CLIP/PTV0703B D_GND
6605
SC9129 SC / PTV0703B SHIELD_CAN_CLIP/PTV0703B D_GND
SC9130 SC / PTV0703B SHIELD_CAN_CLIP/PTV0703B D_GND
SC9131 SC / PTV0703B SHIELD_CAN_CLIP/PTV0703B D_GND
SC9133 SC / PTV0703B SHIELD_CAN_CLIP/PTV0703B D_GND
SC9132 SC / PTV0703B SHIELD_CAN_CLIP/PTV0703B D_GND
SC9134 SC / PTV0703B SHIELD_CAN_CLIP/PTV0703B D_GND
SC9135 SC / PTV0703B SHIELD_CAN_CLIP/PTV0703B D_GND
SC9136 SC / PTV0703B SHIELD_CAN_CLIP/PTV0703B D_GND
NFC
SC9138 SC / PTV0703B SHIELD_CAN_CLIP/PTV0703B D_GND
SC9137 SC / PTV0703B SHIELD_CAN_CLIP/PTV0703B D_GND
SC9139 SC / PTV0703B SHIELD_CAN_CLIP/PTV0703B D_GND
SC9142 SC / PTV0703B SHIELD_CAN_CLIP/PTV0703B D_GND
SC9140 SC / PTV0703B SHIELD_CAN_CLIP/PTV0703B D_GND
BB-Bot
SC9145 SC / PTV0703B SHIELD_CAN_CLIP/PTV0703B D_GND
SC9146 SC / PTV0703B SHIELD_CAN_CLIP/PTV0703B D_GND
SC9147 SC / PTV0703B SHIELD_CAN_CLIP/PTV0703B D_GND
SC9150 SC / PTV0703B SHIELD_CAN_CLIP/PTV0703B D_GND
SC9151 SC / PTV0703B SHIELD_CAN_CLIP/PTV0703B D_GND
SC9152 SC / PTV0703B SHIELD_CAN_CLIP/PTV0703B D_GND
SC9144 SC / PTV0703B SHIELD_CAN_CLIP/PTV0703B D_GND
RF-Bot
SC9153 SC / PTV0703B SHIELD_CAN_CLIP/PTV0703B D_GND
SC9154 SC / PTV0703B SHIELD_CAN_CLIP/PTV0703B D_GND
SC9155 SC / PTV0703B SHIELD_CAN_CLIP/PTV0703B D_GND
SC9156 SC / PTV0703B SHIELD_CAN_CLIP/PTV0703B D_GND
SC9159 SC / PTV0703B SHIELD_CAN_CLIP/PTV0703B D_GND
SC9160 SC / PTV0703B SHIELD_CAN_CLIP/PTV0703B D_GND
SC9161 SC / PTV0703B SHIELD_CAN_CLIP/PTV0703B D_GND
SC9164 SC / PTV0703B SHIELD_CAN_CLIP/PTV0703B D_GND
SC9162 SC / PTV0703B SHIELD_CAN_CLIP/PTV0703B D_GND
SC9163 SC / PTV0703B SHIELD_CAN_CLIP/PTV0703B D_GND
SC9165 SC / PTV0703B SHIELD_CAN_CLIP/PTV0703B D_GND
SC9166 SC / PTV0703B SHIELD_CAN_CLIP/PTV0703B D_GND
SC9167 SC / PTV0703B SHIELD_CAN_CLIP/PTV0703B D_GND
SC9168 SC / PTV0703B SHIELD_CAN_CLIP/PTV0703B D_GND
SC9169 SC / PTV0703B SHIELD_CAN_CLIP/PTV0703B D_GND
SC9187 SC / PTV3121N SHIELD_CAN_CLIP/3P/SMD/PTV3121N D_GND
SC9188 SC / PTV3121N SHIELD_CAN_CLIP/3P/SMD/PTV3121N D_GND
SC9189 SC / PTV3121N SHIELD_CAN_CLIP/3P/SMD/PTV3121N D_GND
SC9190 SC / PTV3121N SHIELD_CAN_CLIP/3P/SMD/PTV3121N D_GND
SC9191 SC / PTV3121N SHIELD_CAN_CLIP/3P/SMD/PTV3121N D_GND
SC9192 SC / PTV3121N SHIELD_CAN_CLIP/3P/SMD/PTV3121N D_GND
SC9193 SC / PTV3121N SHIELD_CAN_CLIP/3P/SMD/PTV3121N D_GND
SC9194 SC / PTV3121N SHIELD_CAN_CLIP/3P/SMD/PTV3121N D_GND
Fiducial mark
FD9101 FD
FD9102 FD
FD9103 FD
FD9104 FD
Antenna cable clip
SC9185 SC / PCV1003 CABLE_CLIP/3P/SMD/PCV1003 D_GND
SC9172 SC / PTV0703B SHIELD_CAN_CLIP/PTV0703B D_GND
SC9173 SC / PTV0703B SHIELD_CAN_CLIP/PTV0703B D_GND
SC9174 SC / PTV0703B SHIELD_CAN_CLIP/PTV0703B D_GND
SC9175 SC / PTV0703B SHIELD_CAN_CLIP/PTV0703B D_GND
SC9176 SC / PTV0703B SHIELD_CAN_CLIP/PTV0703B D_GND
SC9177 SC / PTV0703B SHIELD_CAN_CLIP/PTV0703B D_GND
SC9178 SC / PTV0703B SHIELD_CAN_CLIP/PTV0703B D_GND
SC9179 SC / PTV0703B SHIELD_CAN_CLIP/PTV0703B D_GND
SC9180 SC / PTV0703B SHIELD_CAN_CLIP/PTV0703B D_GND
SC9181 SC / PTV0703B SHIELD_CAN_CLIP/PTV0703B D_GND
MEDIATEK
Title 91_MECHANICAL
Size C
MTK Confidential
Date: Friday, May 16, 2014
Sheet 91 of 99